ecoscape®

www.ecoscape.co.uk
01706 364 637
sales@ecoscape.co.uk

CLARITY COMPOSITE DECKING

November 2026

Specification Guide

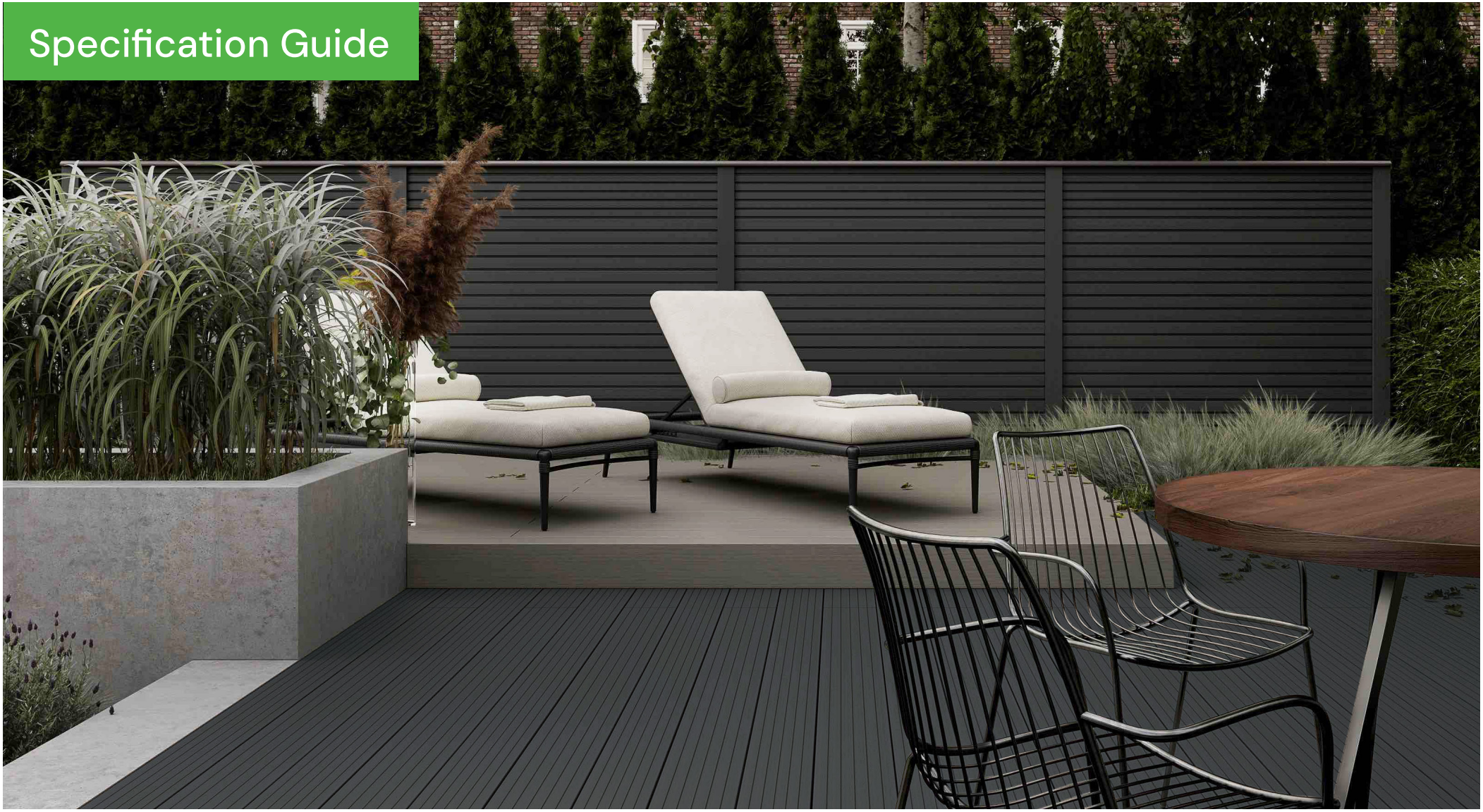

Clarity Composite Decking

Clarity composite decking is a low maintenance alternative to timber, with no need to paint, stain or seal. Made from 95% recycled material, its contemporary grooved finish gives clean lines that suit almost any outdoor project.

The surface texture is designed for low slip potential, making Clarity a considered choice where safety matters. Available in 3 colours, with a reversible finish.

PRODUCT CODES







Length	Charcoal	Graphite	Walnut
3.0m	ECO05BAC	ECO05BAG	ECO05BAW
4.8m	ECO05CAC	ECO05CAG	ECO05CAW

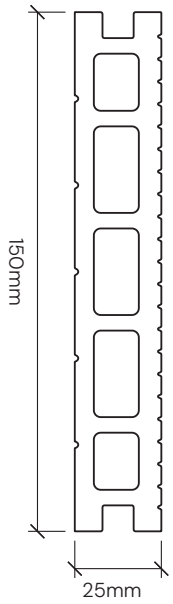

DETAILS

LENGTH	3000mm / 4800mm
WIDTH	150mm
THICKNESS	25mm
WEIGHT	2.77kg p/lm
MATERIAL	Wood plastic composite
FINISHES	6mm (1/4in) groove on one side, 25mm (1in) groove on the other.
WARRANTY	20 years

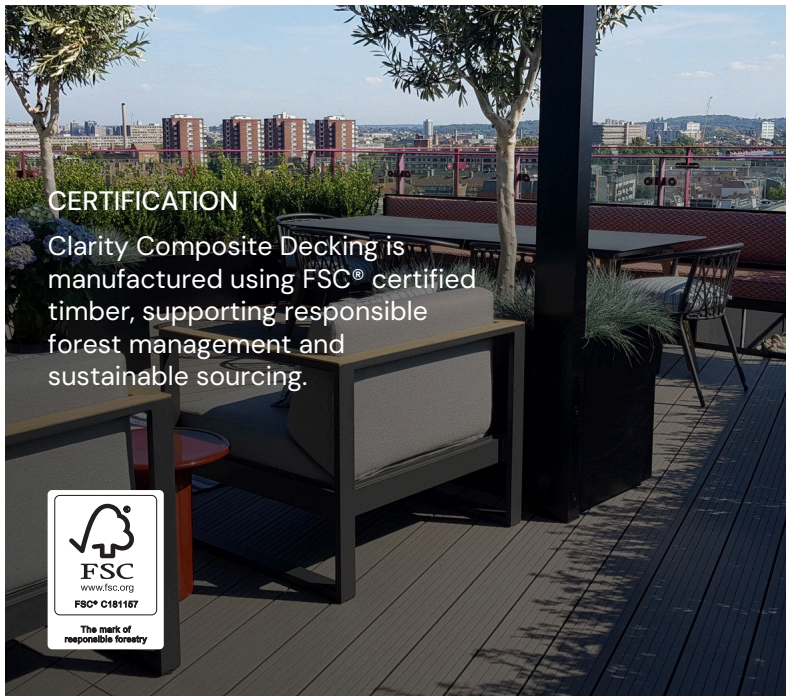

Clarity Decking Benefits

Clarity is our entry-level decking, made from 95% recycled material with no need to paint, stain or seal. Each board is reversible, with narrow grooves on one side and wider grooves on the other. Clarity is our best-performing board for low slip potential, with strong results in both wet and dry conditions.

20 YEAR WARRANTY

LOW MAINTENANCE

SLIP RESISTANT

FAST, EASY INSTALL

HIDDEN FIXINGS

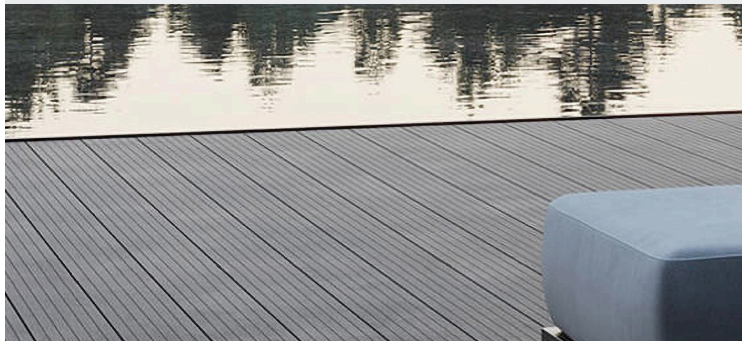



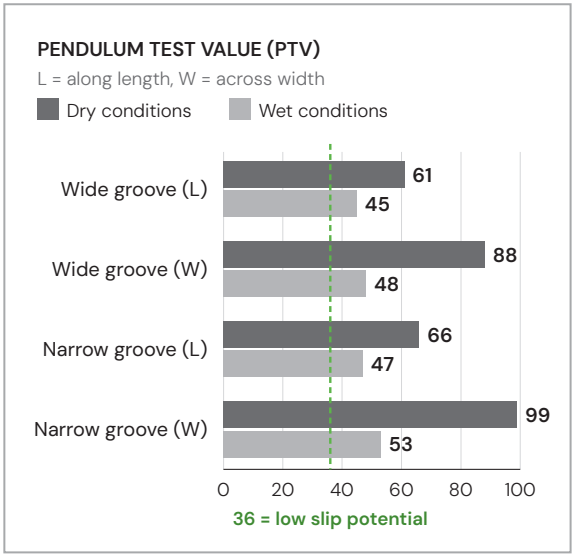

Sustainable Choice

Ecoscape wood plastic composite (WPC) is made from recycled HDPE plastic and reclaimed wood fibre from sustainable timber manufacturing.

Each year, our products incorporate an average of 4,401 tonnes of recycled HDPE plastic, diverting waste from landfill and giving it a new life as durable external building products.

Choosing Ecoscape helps make better use of reclaimed materials while creating durable products for a more sustainable future.

Pendulum Test Value

The slip test results show that Clarity decking boards exceed the PTV of 36 required to be classified as low slip potential, when tested in both wet and dry conditions across the width (W) and along the length (L) of the board.

Working Specification - Decking Systems

The drawings below show a typical substructure detail for Ecoscape composite decking, shown with Ecoscape Plastic Joist Substructure. Clarity decking boards must be supported by joists placed at 400mm centres.

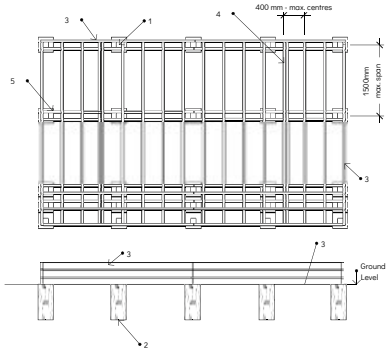

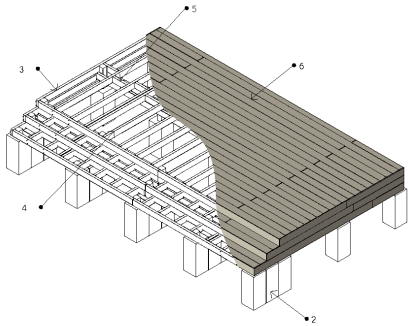



ECO09CS: Hidden T-Clip
(250 per box)



ECO09LC: Locking Clip
(50 per bag)



ECO05SF: Start / Finish Clip
(50 per bag)

1: 100 x 100mm Ecoscape Plastic Decking Post (ECOPL100100)

2: Concrete Post Foundation

3: Framing Joist - 125 x 50mm Ecoscape Plastic Decking Joist (ECOPL12550)

4: Joist - 125 x 50mm Ecoscape Plastic Decking Joist (ECOPL12550)

5: Noggin - at 1500mm max. centres along joist

6: Clarity Decking Boards

Clarity decking boards should always be used with Ecoscape's clip system to allow for thermal expansion, with our Locking Clip used to keep boards held in place for years to come.

For further information, please see Ecoscape's Composite Decking Installation Guide on www.ecoscape.co.uk

Property	Test Method	Test Result	Notes
Abrasion Resistance	ASTM D4060-10	33mg (1000 cycles)	
Brinell Hardness	EN15534	Brinell hardness: 55.25N/mm² Rate of elastic recovery: 74.4%	Test method: Clause 7.5 of EN 15534-1:2014+A1:2017 Specimen: 100×150×25mm Diameter of indenter: 10mm Test speed: 66N/s Final load: 2000N Maintaining time: 25s
Boiling Test	EN15534	1.1% Water Absorption by weight	
Bond Strength	EN319	Average Bond Strength > 2.3MPa No obvious abruption after Test	
Coeff. of Linear Thermal Expansion	EN15534	34.7x10^{-6}K^{-1}	Test method: ASTM D696 Specimen: 78×10×10mm Temperature range: -30℃ to 30℃
Creep Behaviour (known span in use)	EN15534	ΔS: 0.99mm (mean); ΔS: 0.99mm (max. individual value); ΔSr: 0.53mm	Requirements of EN 15534-4:2014: ΔS ≤ 10 mm for arithmetic mean value ΔS ≤ 13 mm for individual values ΔSr ≤5 mm for arithmetic mean value
Content of Pentachloro-phenol	CE (EN 14041 (2004)	2.99ppm	
Creep Recovery	ASTM D7032	Creep recovery after 24h: 93%	
Degree of Chalking	EN15534	Rating 0, no chalking	
Electrostatic Behaviour	EN1815	Body-Voltage: 1.1kV	Can be classified as anti-static
Fire Resistance	EN13501, EN ISO9239-1, EN ISO11925-2	C_{fl}-S 1	
	ASTM E84	FSI: 85, SDI; 300	
Falling Mass Impact Resistance	EN 15534	Max. crack length (mm): no crack Max. Residual Indentation (mm): 0.40	Requirements of EN 15534-4:2014 Hollow profiles: None of 10 test specimens shall show a failure with a crack length ≥ 10 mm or a depth of residual indentation ≥ 0.5 mm.
Formaldehyde Content	EN717 ASTM D6007-14	Non Detected	
Flexural Properties	EN 15534	Pass: Bending Strength: 26.93MPa; MOE: 4.26GPa; Max. Load: 4029N; Deflection at 500N: 0.57mm	Requirements of EN 15534-4:2014 F'max ı 3300 N (arithmetic mean value) F'max ı 3000 N (individual values) Deflection under a load of 500N ≤ 2.0 mm (arithmetic mean value) Deflection under a load of 500N ≤ 2.5 mm (individual values)
Heat Build-up	EN 15534	Average temperature rise for specimen: 43.2℃ Predicted heat build-up: 43.2℃	

Property	Test Method	Test Result	Notes
Impact Resistance	ASTM D4226	MFE>396J	
Lead Content Test	EUNo.628/2015	Non Detectable	
Mould Resistance	ASTM G21	Rating: 0	
Moisture Content	EN 15534, EN322	0.56%	
Moisture Under Cyclic Test Conditions	EN15534	Ave. bending strength: 24.71MPa Ave. MOE: 3610MPa Mean of decrease of bending strength: 8.24% Maximum individual decrease of bending strength: 10.58%	Pass - Requirements of EN 15534-4:2014□ 1)Mean of decrease of bending strength ≤ 20 % 2)Individual decrease of bending strength ≤ 30 %
Neutral Salt Spray Test	ASTM B117-2011 EN 15534 ISO9227	Front Surface ΔE *=1.22, grey scale; 4-5. Back Surface ΔE *=1.06, grey scale; 4-5. ΔE *=1.42, grey scale: 4 (exposure 96h)	After 200 hour test, there was no visible change appeared on the Surface:
pb, cd, hg, cr^{5+}	RoHs-IEC62321	pb, cd, hg, cr^{5+}: Non Detectable	
Resistance to Scratch	ISO4586-2		Rate 2
Resistance to Indentation	EN 15534	Apply 2000N load Brinell hardness: 55.25MPa; Rate of Elastic recovery: 74.4%	
Resistance to Artifical Weathering	EN 15534 ISO4892-2	ΔL*: 5.12 Δa*: 3.7 Δb*: 0.08	Filter: daylight filter Exposure period: 102min dry and 18min water spray Irradiance: 0.51W/(m2.340nm) Duration: 300 hours

Slip Resistance	EN15534
	Pendulum Test
		Dry Conditions: Wide Groove: 61(L)/88(W) // Narrow Groove: 66(L)/99(W)
		Wet Conditions: Wide Groove: 45(L)/48(W) // Narrow Groove: 47(L)/53(W)
		*(L) denotes slip test along length of the board, & (W) denotes slip test across board width	

Swelling & Water Absorption (24 hours submersion)	EN 15534	Average Swelling: 1.34% (Thickness); 0.38% (Width); 0.15% (Length) Water Absoprtion: 5.31%	Pass
Moisture Resistance - Booiling test	EN 15534	Water Absoprtion: Average Value 2.751% Max. value: 2.84%	Pass
SRI Testing	ASTM C1549, ASTM C1371, ASTM E1980		19
Surface Bond Quality	EN319		≥2.08MPa
Thermal Reistance	ASTM C518-2010		Thermal Conductivity: 03589W/(m-k) Thermal Resistance: 0.0830(m²-k)/W
Thermal Conductivity	CE (EN 14041 (2004)		0.19738W/(m-k)
UV Weathering Test	ASTM G154		After 3000 hour test: ΔE*=3.56, grey scale 3
Uplift Resistance	ICC-ES AC174, ASTM E330		Average Ultimate Load ≥427 psf
VOC & TVOC	ASTM D5116-11		Non detectable

Disclaimer

At Ecoscape, we take care to ensure the information in this document is accurate at the time of publication and provided in good faith to support your project.

To continuously improve our products, we reserve the right to update specifications, dimensions, colours, finishes, performance data and installation guidelines without prior notice. Visuals, including images, illustrations and drawings, are for guidance only. Nominal dimensions and weights are subject to standard manufacturing tolerances. Natural variations in colour, tone, grain pattern and surface texture are inherent characteristics of Clarity Composite Decking and may vary between individual boards and production batches.

To the fullest extent permitted by law, Ecoscape UK Ltd accepts no liability for loss or damage arising from improper specification, storage, installation or maintenance. Always check that you have the latest version of this document before placing an order or commencing work.

ecoscape®

OUTDOOR ARCHITECTURAL MATERIALS

Higher Broadfield Farm,
Off Pilsworth Road,
Greater Manchester, OL10 2TA

www.ecoscape.co.uk
01706 364 637
sales@ecoscape.co.uk