

INSTALLATION GUIDE



COMPOSITE FENCING



ecoscape®

www.ecoscape.co.uk | 01706 364637

Revised Oct 2026

CONTENTS

STORAGE AND HANDLING	03
SAFETY AND USE	04
TOOLS	05
CALCULATING MATERIAL	06
COLOURS AND EFFECTS	07
FENCING COMPONENTS OVERVIEW	08
FENCING COMPONENTS	09
FENCING COMPONENTS CONT	10
INSTALLATION METHODS	12
INSTALLATION - IN GROUND OR GRASS	13
INSTALLATION - TO CONCRETE FOOTING OR BLOCK WALL	23
INSTALLATION - RETROFIT	27
CLEANING AND CARE	30

STORAGE & HANDLING

Whilst our composite materials are highly durable we do recommend you follow the below guidelines for storage, handling and installation, to ensure products are kept in the best condition.

STORAGE

– Materials should be stored under cover in shade, and protected from weather until ready to install.

– Materials should be covered and kept dry until ready to install to ensure a clean surface. Products should not be stored outside and / or covered with plastic sheeting.

– All composite products should be stored supported above the ground at 500mm intervals on a flat clean surface. Supporting battens used in storage should align through the stack to equally transfer the load.

– Fencing panels must be stacked on top of each other.

– Where multiple pallets are delivered these should not be stacked higher than 3m per stack.

– Ecoscape will not be held responsible for any issues that arise from poor storage.

HANDLING

– Fencing boards should be lifted and set down with care to avoid damage. Do not slide boards over one another.

– Fencing boards should be carried in the middle and on their edge for best support when moving.

– Avoid sliding or dragging any equipment across the board surface to avoid tarnishing the surface.

– The surface of the fencing boards should be kept free of construction debris and material to prevent damage to the boards.

As with all sites, surfaces should be kept clean and tidy for the best installation outcome.

SAFETY & USE

Prior to installing any composite system we recommend that you consult local building regulations for any special requirements or restrictions that may apply. The illustrations and accompanying instructions in this guide are for illustrative purposes to provide a typical installation scenario, and do not replace the advice of a licensed professional in the field.

SAFETY

- Personal Protection Equipment (PPE) should be worn at all times (COSHH Assessment summary available). When cutting and installing boards it is advised to wear gloves, protective eye wear, a dust mask, long sleeves and trousers.

- Dry and windy environments may result in a naturally occurring static build-up in composite products. The level of static build up will not cause personal injury.

USE

- Standard tools can be used to install our composite fencing. When using a chop saw we would recommend a 60T+ Multipurpose Aluminium blade for maximum efficiency and neatness on cuts.

- Plan a layout for your fencing before starting to ensure the best looking layout is achieved.

TOOLS

RECOMMENDED TOOLS TO INSTALL ECOSCAPE COMPOSITE FENCING SYSTEM

Standard woodworking/fencing tools can be used when working with Ecoscape Composite Fencing. If you are unsure on how to use any tool, please consult the tool's manufacturer's instructions.

Stringline

Tape measure

Spirit Level

Hole digging equipment

Hand saw / Mitre Saw.

Protective eye wear and relevant Personal Protection Equipment (PPE)

Pencil

Not essential but useful – Laser level and Post hole digger

Electric drill and cordless screwdriver when installing the fence base plates

CALCULATING MATERIAL

To determine how much Ecoscape Fencing material will be required, you can either use detailed plans and elevations, or follow the method below.

Step 1. Measure the length and height of your fence.

To work out how many fence boards you will need divide the length of the fence / 1905mm. This measurement is the total width of a panel including the centre of posts as illustrated

Fence Posts Plan

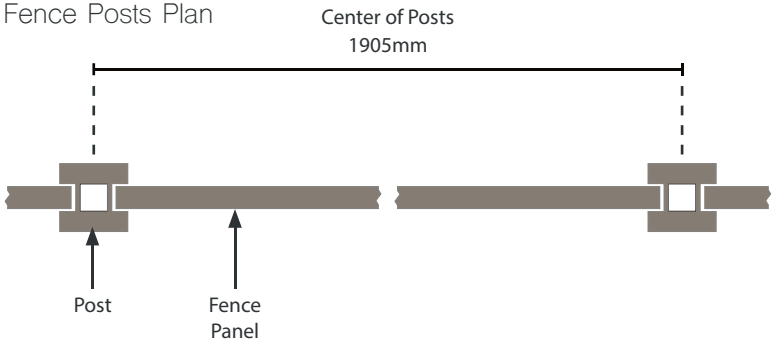

Detail Plan View:

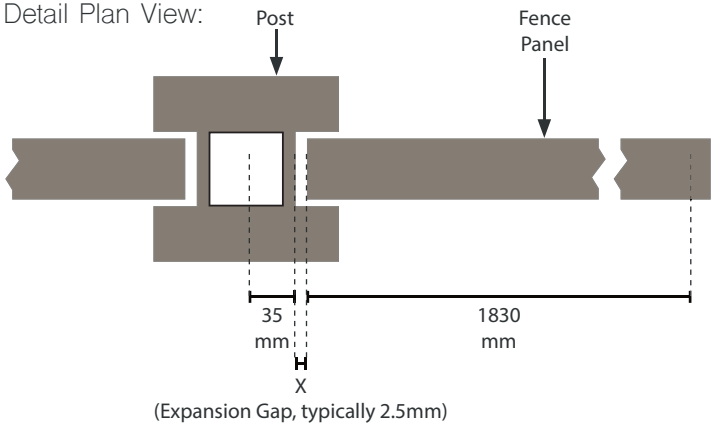

Note: As shown on the diagram adjacent, the set out of the fence boards includes a expansion gap to the end of the board (X). This accounts for minor expansion of the board during hot weather.

The expansion gap value (X) should be as follows:

Air Temperature at time of installation	Expansion Gap (X)
0 degrees	4mm
10 degrees	3mm
20 degrees	2mm
30 degrees	1.5mm

Note – If required the fence posts can be cut to length using standard woodworking tools or account for the expansion gap if required.

Step 2. Calculate the height

Fence boards are 1830mm in length x 157mm in height but have a finished face of 150mm.

Below is a list showing the number of standard Fence Boards (excluding Aluminium Bottom Rail (45mm assembled height) + top fence board 140mm assembled height =185mm) needed to achieve a certain height, based on stacking the boards on top of each other horizontally:

11no. Boards =1650mm (+185mm) =1835mm (approx. 6ft)
9no. Boards = 1350mm (+185mm) = 1535mm (approx. 5ft)
7no. Boards = 1050mm (+185mm) = 1235mm (approx. 4ft)
5no. Boards = 750mm (+185mm) = 935mm (approx. 3ft)

(Area of 1no. Fence Board = 157 x 45 x 1830 = 0.28 m^2

Typical Example:

If your boundary fence is 14 meters long, 1.8m (6ft) in height, and you're installing on a 15 °C day:

Length 14m / 1905mm (Board length, expansion gap and post widths) = 7.34 sections

Number of Fence boards needed – 7 x 11 = 77

For the 0.34 section of a panel, you will get two fence boards out of one length – so another 6 fence boards needed for the cut section.

Total Needed:

Standard Fence Boards = 83
Posts = 9
Post Caps = 9
Aluminium Bottom Rail = 8
Top Fence Board = 8
Plastic Clip = 16

Ecoscape composite fencing range offers end, inter and corner posts. Which posts used depends on your project.

If you need any further help please call/ email on 01706 364 637 or sales@ ecoscape.co.uk

COLOURS AND EFFECTS

Ecoscape Composite Fencing is available in 3 colours, and is dual sided with 38mm battens on one side and 63mm on the other, to allow a range of effects to be achieved:

AVAILABLE COLOURS



CHARCOAL



GRAPHITE

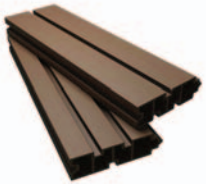

WALNUT

POSSIBLE FINISHES

(PLUS MORE!)

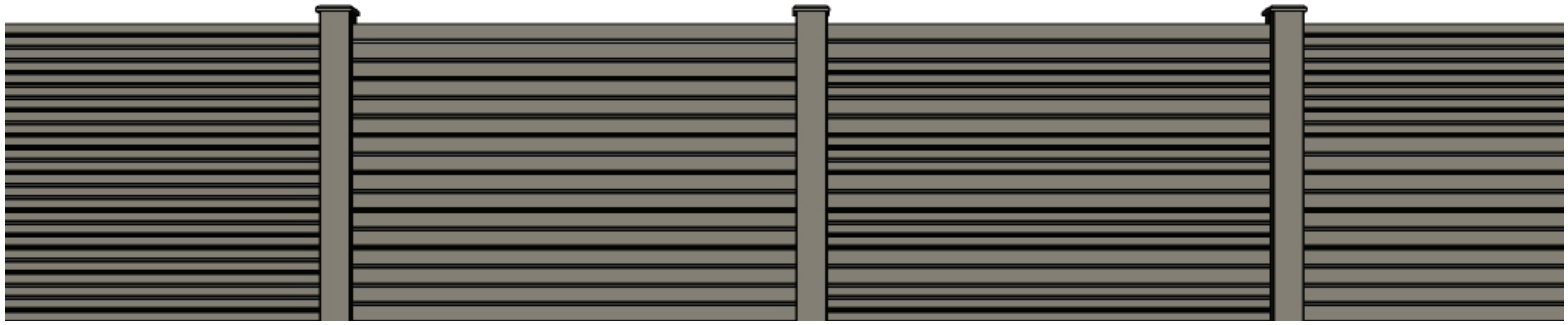

38mm Panel Side

63mm Panel Side

Interchanging 38, 63mm Panel Sides

63mm, 38mm Header Panel Sides

FENCING COMPONENTS OVERVIEW

The diagram below give an overview of the fencing components.

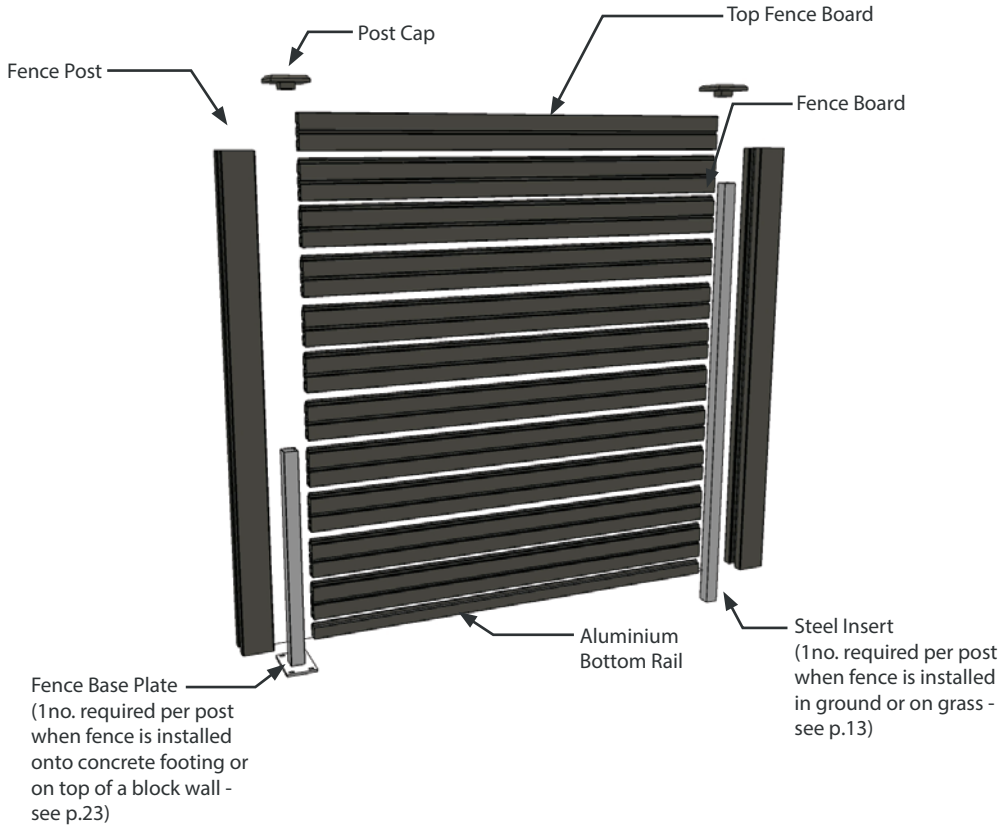

FENCING COMPONENTS

Please ensure you are familiar with all the fencing components prior to

Fence Board

(45 x 157 x 1830mm)**

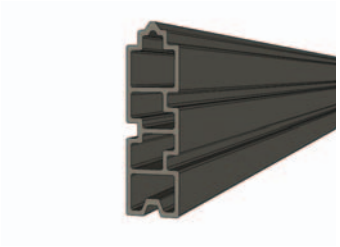

Intermediate Fence Post

(125x125x1940mm)**

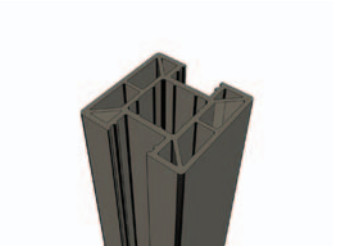

End Fence Post

(125x125x1940mm)**

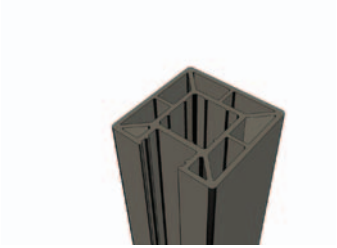

Corner Fence Post

(125x125x1940mm)**

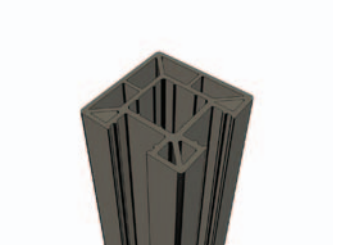

Top Fence Board

(45x138x1830mm)**

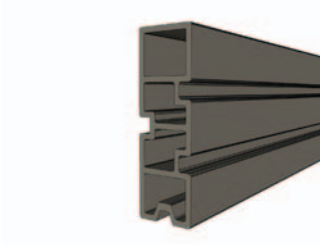

Aluminium Bottom Rail

(45x52x1830mm)**



**Available in colours: Charcoal, Graphite & Walnut

FENCING COMPONENTS
CONT.

Post Cap

(145 x 145 x 23mm)**

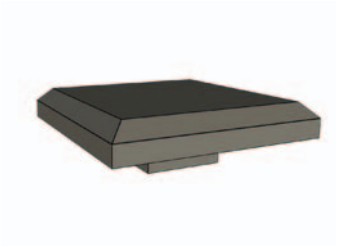

Plastic Security Clip / Support for Aluminium Bottom Rail (optional)

(Supplied as pack of 2)

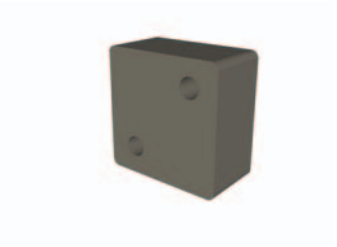

Security Nail (Self Tapper)



Steel Insert

(55x55x1940mm)

(Concreted into the ground)

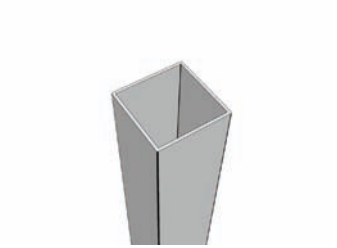

Fence Base Plate (Steel)

(125x190x900mm)

(Fix to Concrete / Masonry)



Base Plate Fixing Bolts and Caps

(M10x80mm)

(Fix to Concrete / Masonry)



**Available in colours: Charcoal, Graphite & Walnut

FENCING COMPONENTS
CONT.

Aluminium Board Insert

(35.6 x 27.3 x 1830mm)

(Fitted to the bottom board, top board and every third board in between)



INSTALLATION METHODS

There are 3 main methods of installing Ecoscape Composite Fencing:

1.



Into ground or grass – with a concrete footing

Please refer to page 13

2.



Onto a concrete foundation or brick wall

Please refer to page 23

3.

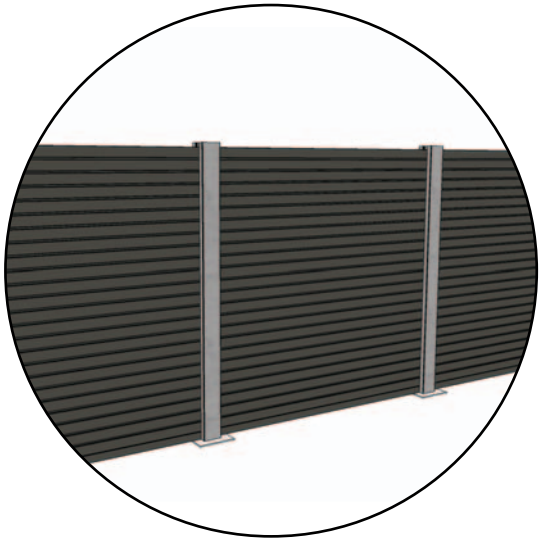

Retrofit – Into existing concrete posts

Please refer to page 27

INSTALLATION - IN GROUND OR GRASS

STEP 1

MARK OUT THE FENCE LINE AND DIG HOLES

A Use a stringline to mark out the line of the fence. Make sure the area is clear of any obstacles/vegetation.

Please note that your posts should always be on your side of the boundary.

A

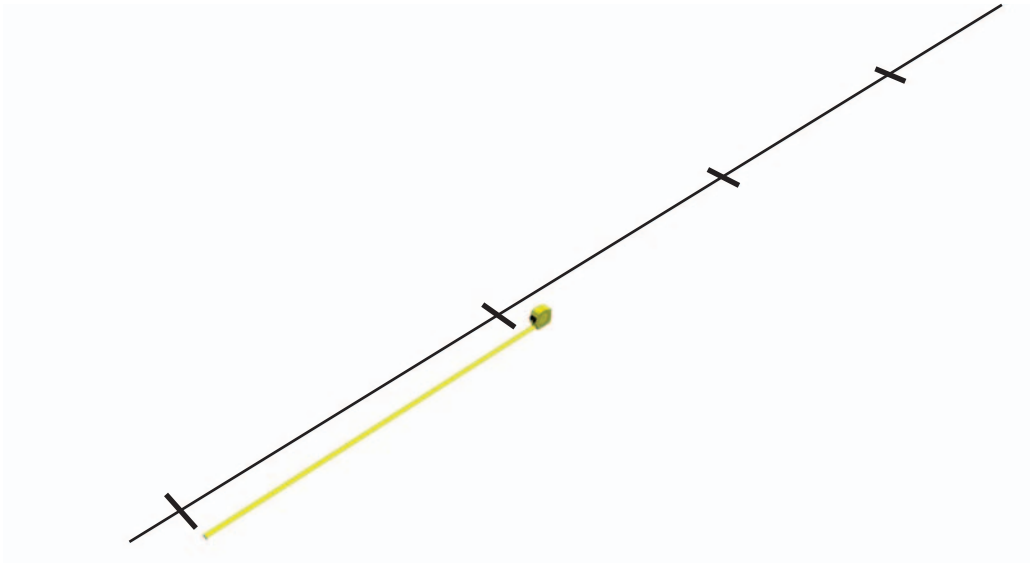

B Dig a hole using a narrow shovel or Fencers graft to a depth of 600–850mm depending on the softness of the ground.

Ensure the base of the pit is level.

B

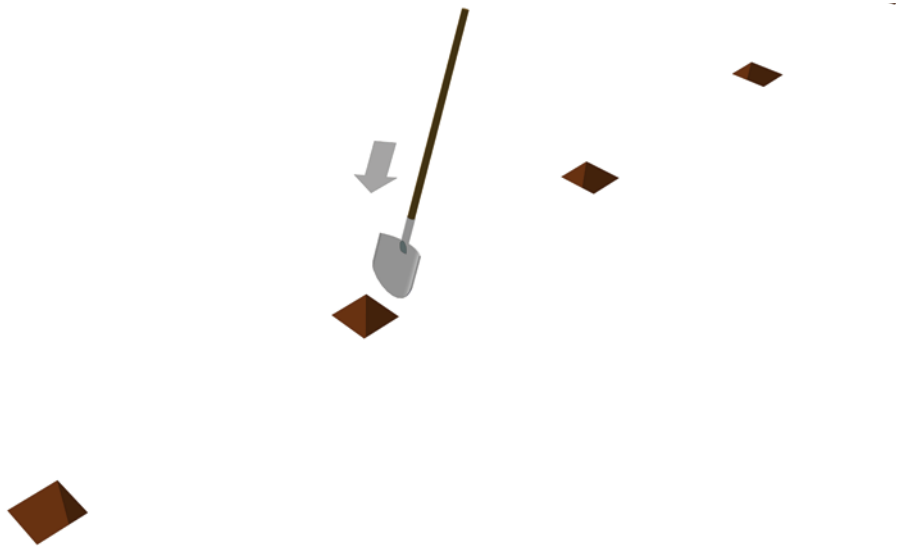

INSTALLATION - IN GROUND OR GRASS

STEP 2

SET THE FIRST STEEL INSERT IN CONCRETE

C Place the steel insert in the hole and ensure it is level using a spirit level. We recommend getting a second person to help you do this.

C

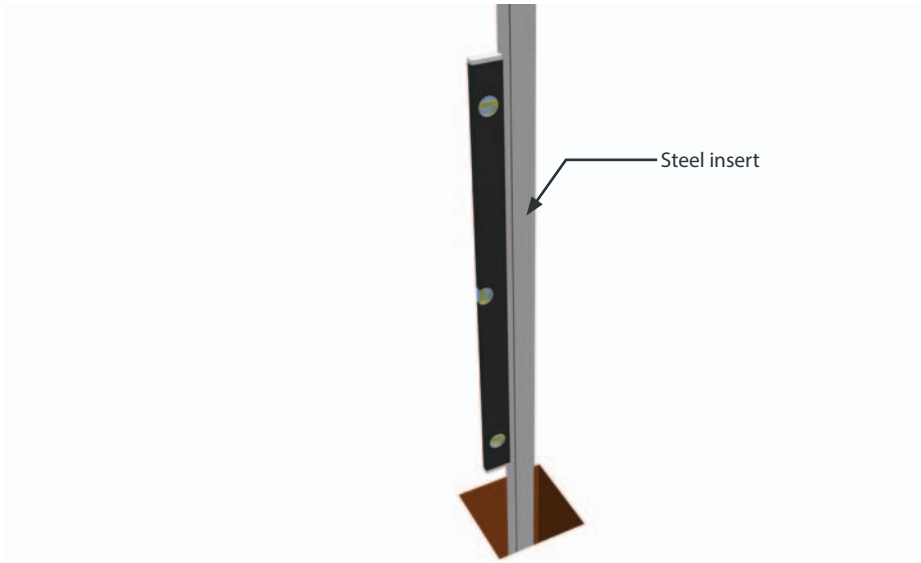

D Fill the hole with post mix concrete. We recommend 2.5–3 no. 20kg bags depending on the size of the hole and ground conditions. Ensure that the concrete is filled to around 25mm below the soil / ground level. Also ensure that concrete is angled away from the fence post to aid water run off

D

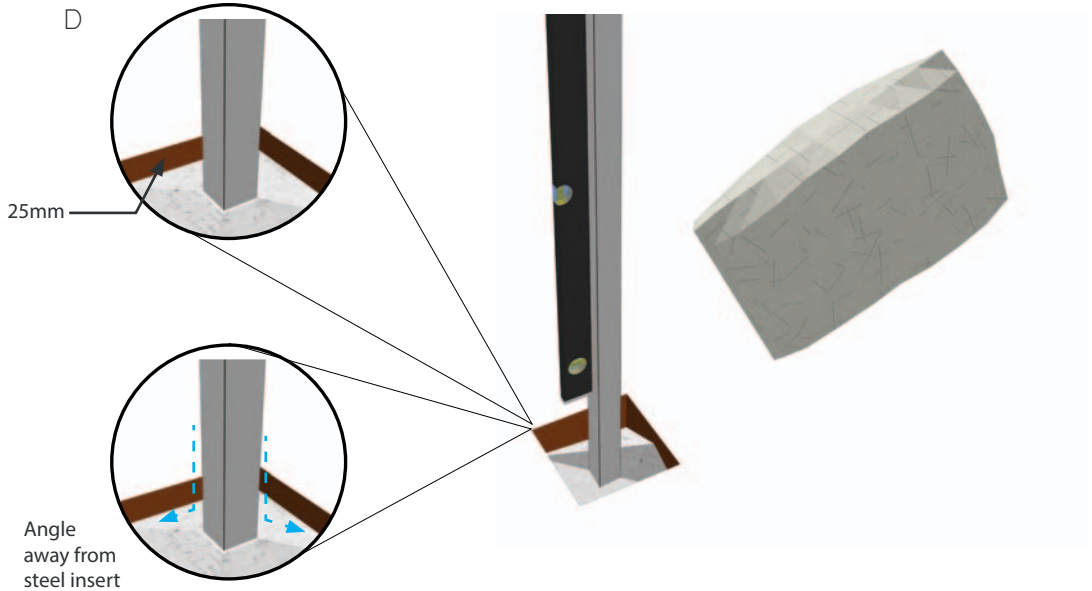

INSTALLATION - IN GROUND OR GRASS

STEP 3

ENSURE THE POST IS LEVEL AND SET OUT THE NEXT

E Place the Composite fence post over the steel insert. Check once more to make sure the post is plumb and level. Brace if needed – but avoid screwing into the composite post. After 24hrs support braces can be removed, once the concrete has set.

Please note – The composite fence post is to sit on-top of the concrete. Only the steel insert is concreted into the ground. Whilst the concrete is setting, ensure the post does not rest on the surface – use temporary battens if necessary.

E

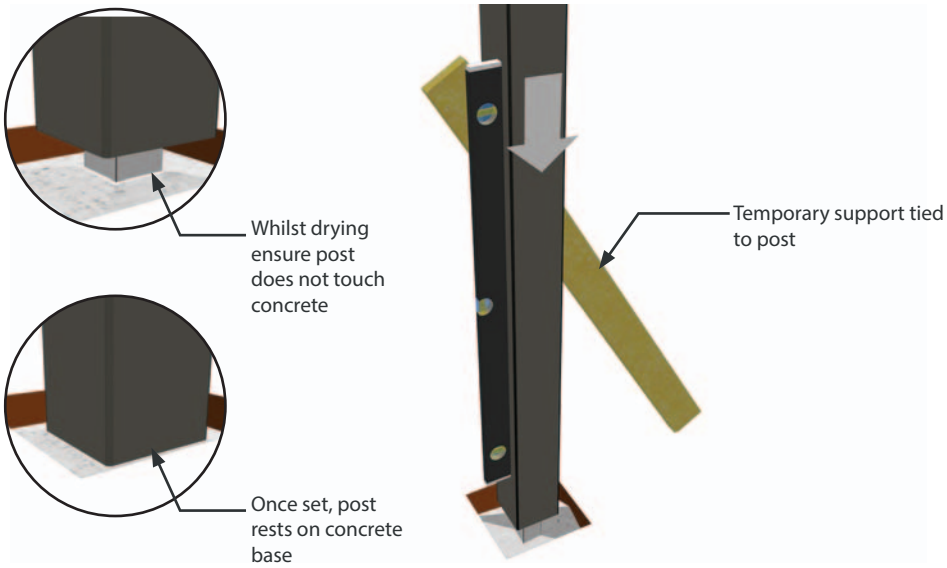

F Use a string line to set out the next post and measure the distance to ensure correct.

It can be useful here to use the Aluminium Bottom Rail (Refer to step 5), to double check the distance and set out. Be careful to not get any wet concrete on the rail itself.

F

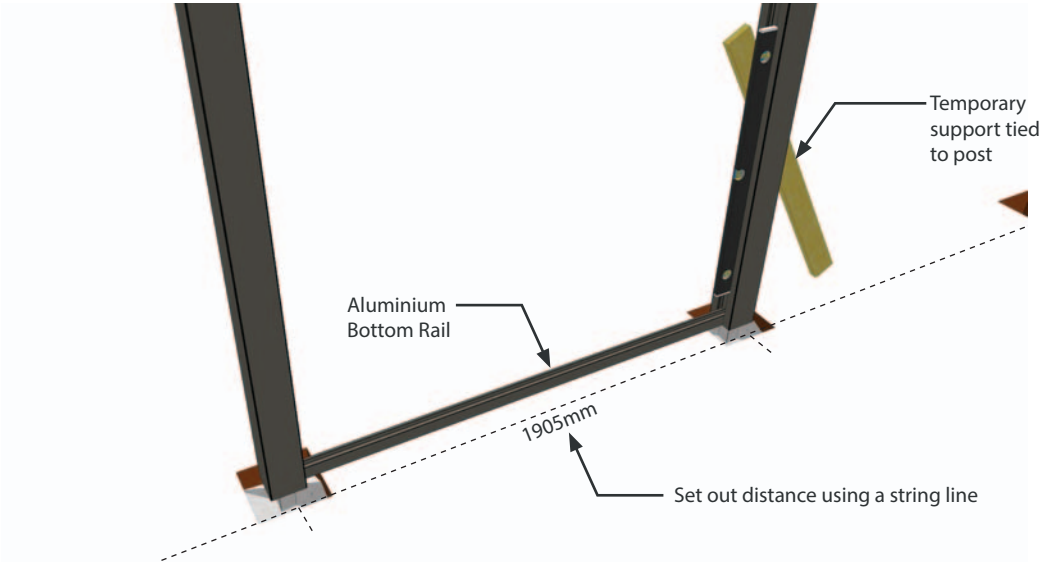

INSTALLATION - IN GROUND OR GRASS

STEP 4

COMPLETE FENCE PANEL OR CONTINUE TO SET OUT POSTS

G At this point you can either:

– Complete the first fence panel by moving to step 5 on the next page, or;

– Continue to set out the remaining fence panels as per step 3.

G



H Before installing the bottom rail, you may wish to install the security clips to the bottom of the fence post to rest the fence boards on. This is particularly useful when the ground isn't sufficiently solid.

H

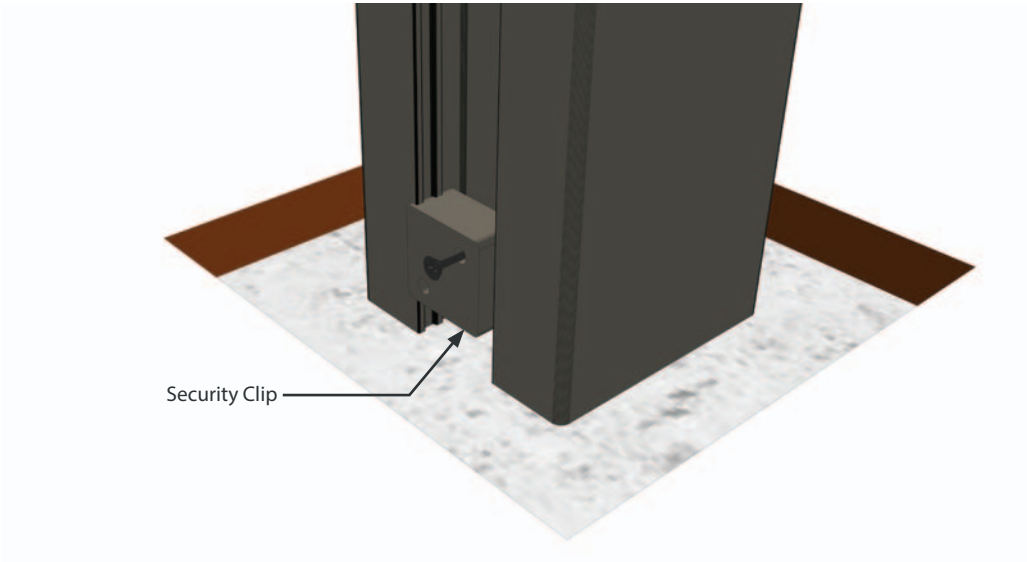

INSTALLATION - IN GROUND OR GRASS

STEP 5

INSERT THE ALUMINIUM BOTTOM RAIL

I Place the aluminium bottom rail into the H groove of the fence post and align both ends. Slide the rail down between the fence posts.

I

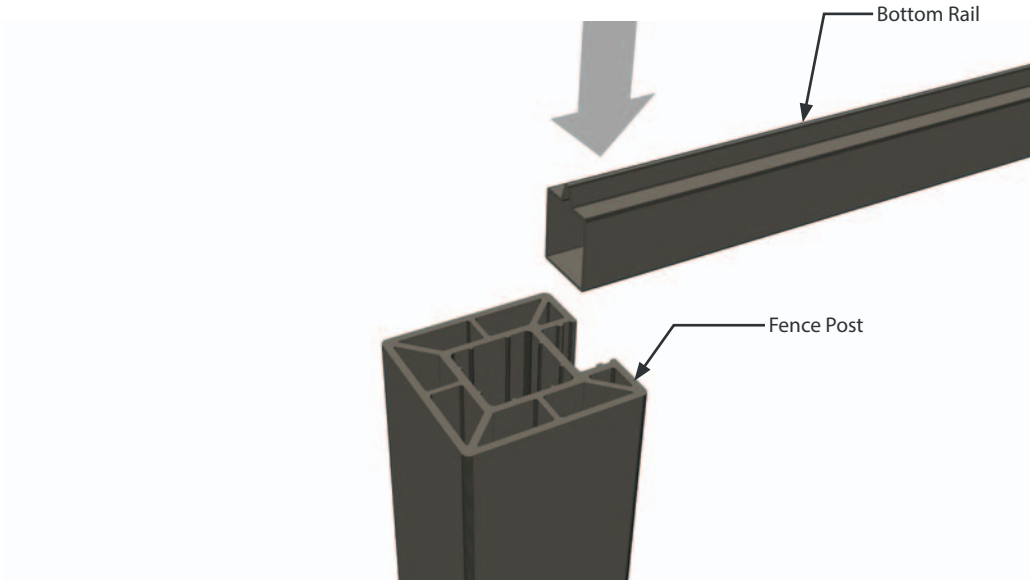

J Level the aluminium bottom rail – the rail can be sunken into the ground if needed.

J

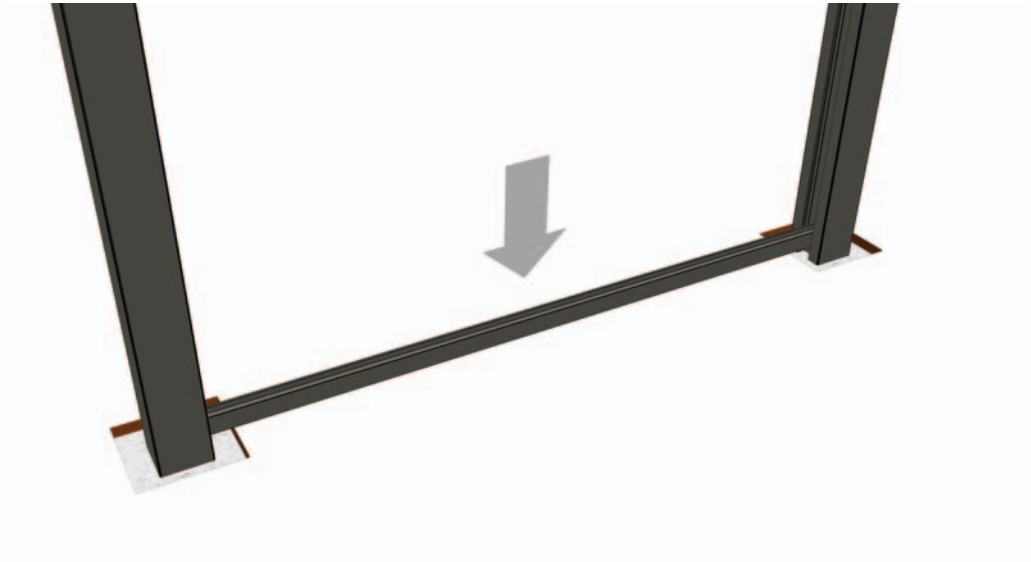

INSTALLATION - IN GROUND OR GRASS

STEP 6

FIT THE BOARD INSERTS

K Before each fence board goes between the posts, slide an aluminium board insert into one of the two end chambers of the board. The insert helps keep the board straight.

Fit an insert into the bottom board, the top board and every third board in between. Each board takes one insert.

Note – On a short bay, cut the insert down to the same length as the cut board.

K

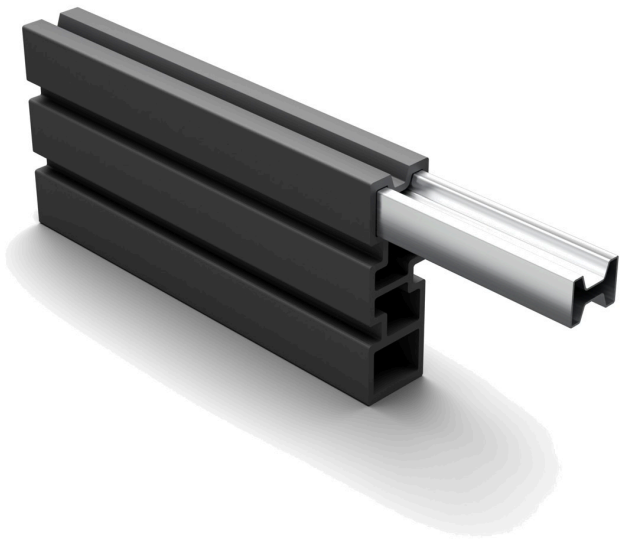

L Push the insert fully home so it sits flush with the end of the board, then slot the board between the posts as shown in Step 7.

L



INSTALLATION - IN GROUND OR GRASS

STEP 7

INSERT THE FENCE BOARDS

M Slot the fence boards between the posts leaving a gap of 2.5mm between the end of the fence board and the post – please see table on page 6 to calculate this expansion gap.

Note – If required the fence posts can be cut to length using standard woodworking tools.

M



N Stack the remaining fence boards.

N

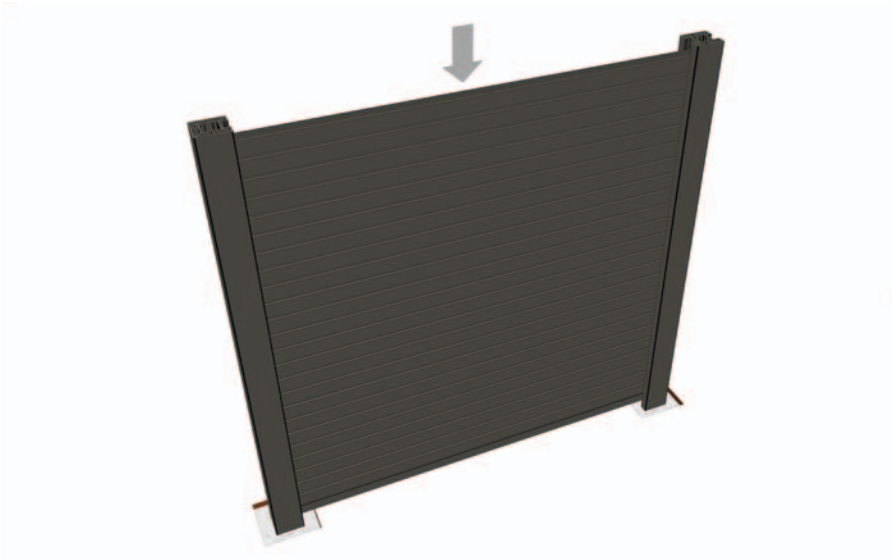

INSTALLATION - IN GROUND OR GRASS

STEP 8

SLOT THE FENCE BOARDS IN BETWEEN THE POSTS

O Finish by inserting the Top Fence Panel.

O

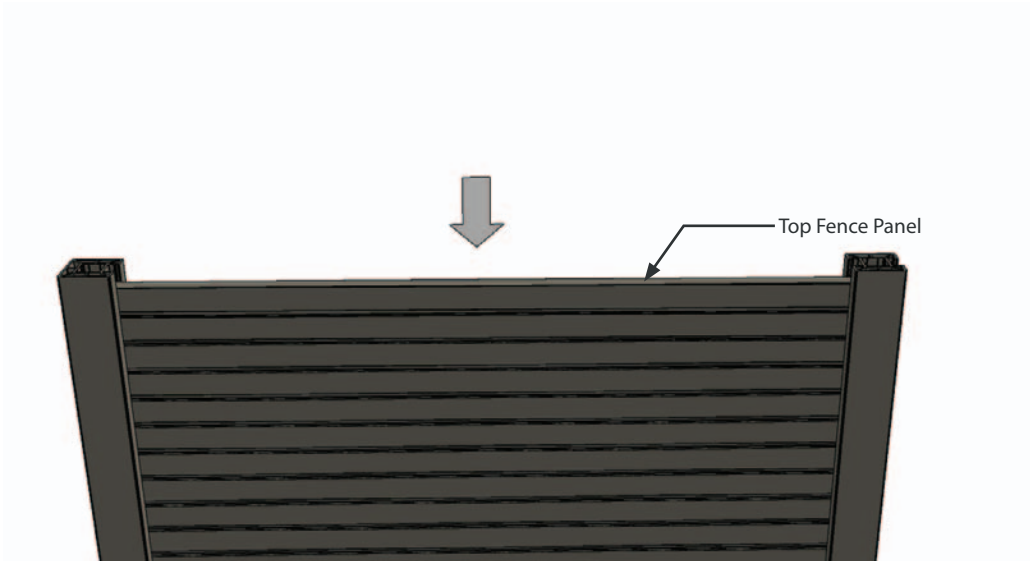

P Optional – It is possible to secure the boards in place using a security clip supplied by Ecoscape. This is simply screwed into the fence post and prevents theft of the fence boards.

Ensure that the clip is installed at least 5mm above the fence board, and 2mm from the top of the fence post to allow installation of the post cap, see next page.

Also ensure the hole is pre-drilled and the screw countersunk to achieve a flush finish. This can be done from either side as shown adjacent.

P

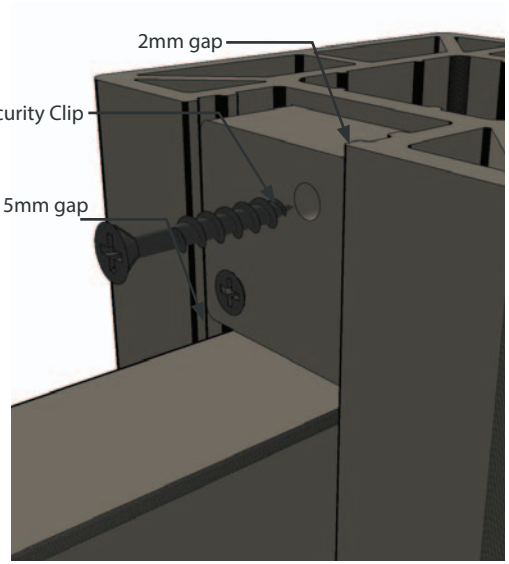

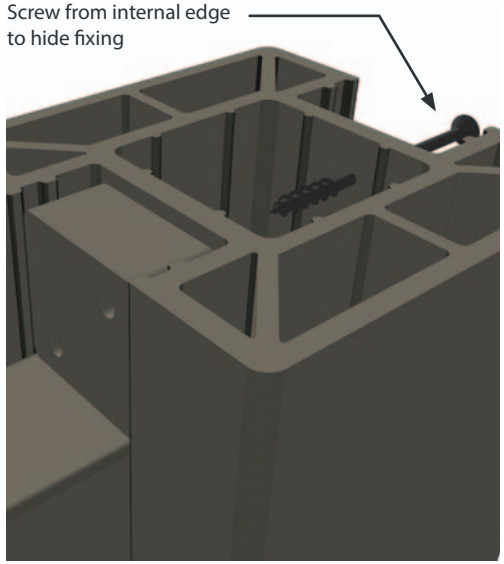

INSTALLATION - IN GROUND OR GRASS

STEP 9

FINISH THE FENCE PANELS

Q Insert the remaining boards and security clips as required.

Q



R Insert the Post Cap.

R

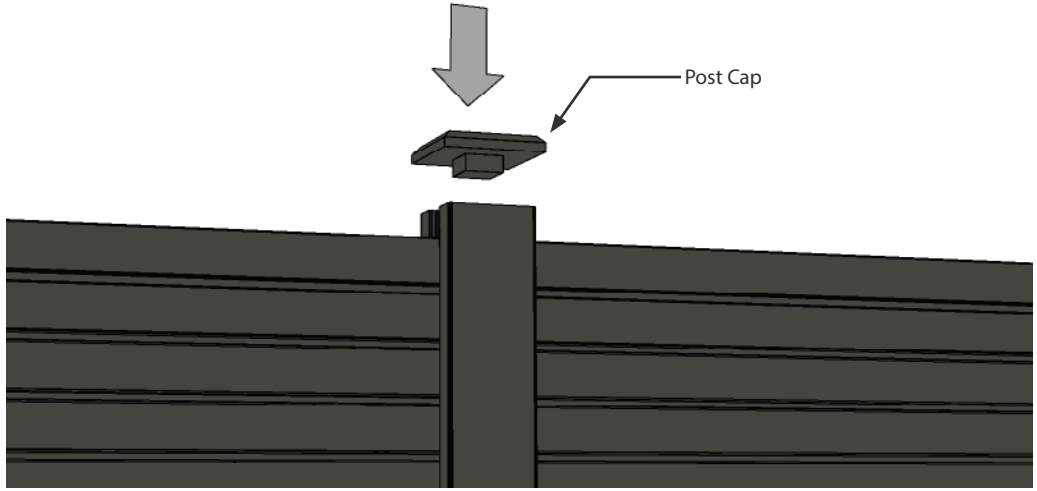

INSTALLATION - IN GROUND OR GRASS

STEP 10

SECURE THE POSTS

S OPTIONAL – The fence posts can be secured by screwing the base and top into the steel insert. If done, the holes should be pre-drilled and the screws (self tapping) should be countersunk in place to prevent cracking.

S

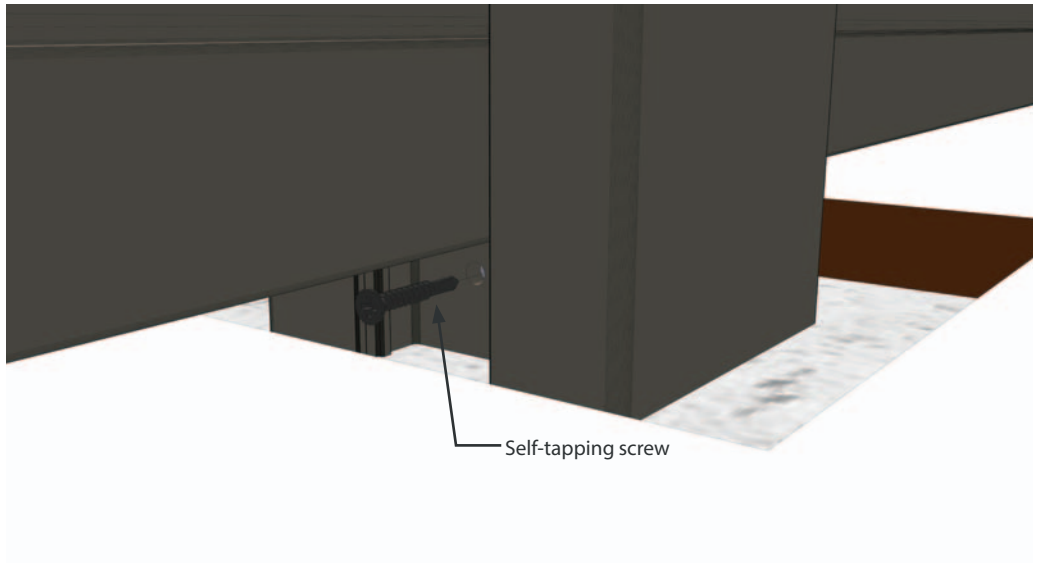

Job Done!

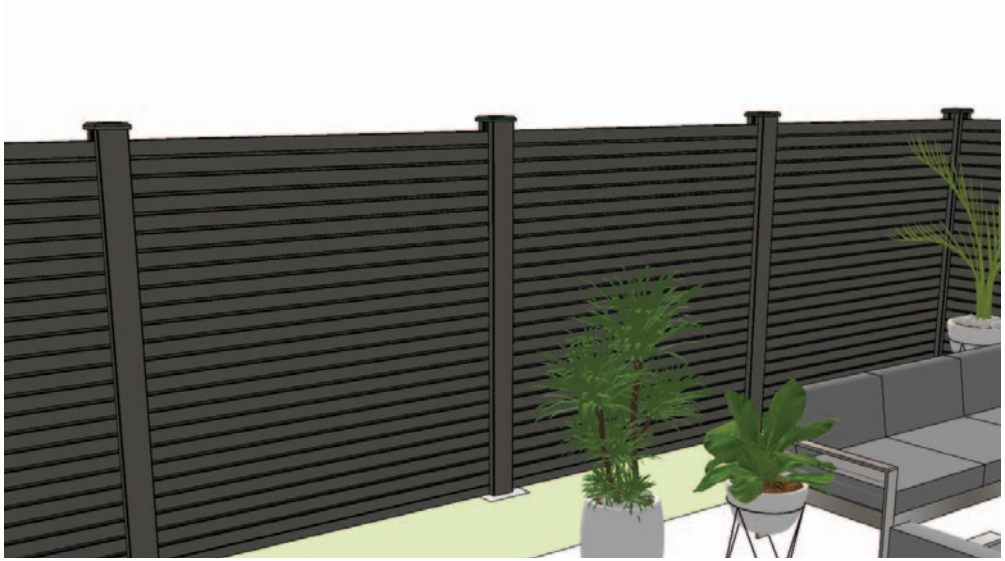

INSTALLATION - TO CONCRETE FOOTING OR BLOCK WALL

STEP 1

FIX THE FENCE BASE PLATE TO THE WALL / FOOTING

A Before starting – ensure the wall or footing is in adequate condition. Minimum depth of masonry/concrete to be 150mm thick. Ecoscape cannot take responsibility for inadequate structural foundations.

Place metal post supports in position, ensuring they are plumb/level and square to the run of the fencing. First drill 3–5mm pilot holes. Then, if you are using the supplied M10 x 80mm anchor bolts, you will need to pre-drill the structure to accept these. This should require a masonry drill bit of 13mm or 14mm diameter – depending on the substrate being fixed into.

A

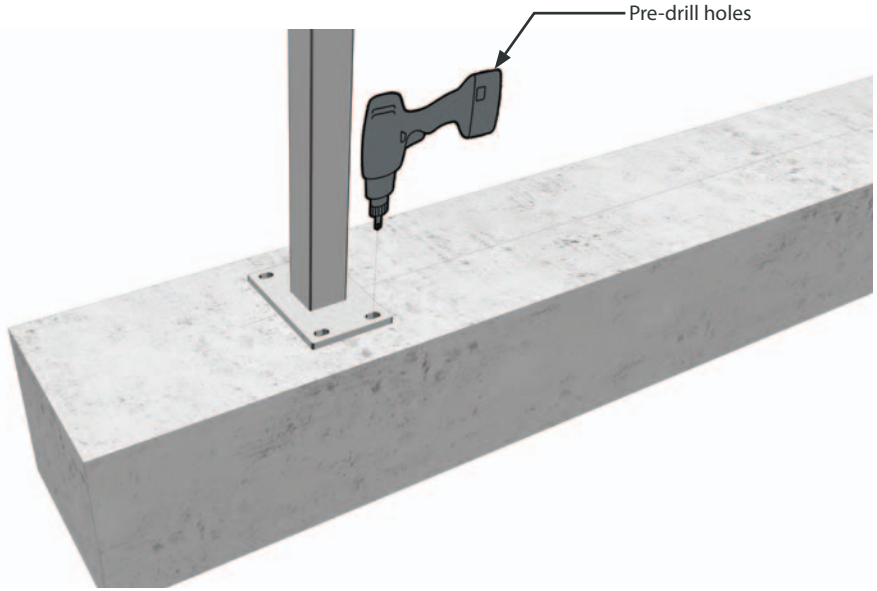

B Ensure the insert is plumb and secure. Use steel shims / packers if required.

B



INSTALLATION - TO CONCRETE FOOTING OR BLOCK WALL

STEP 2

ADD THE FENCE POSTS

C Ensure the bolts are sufficiently tight.

C

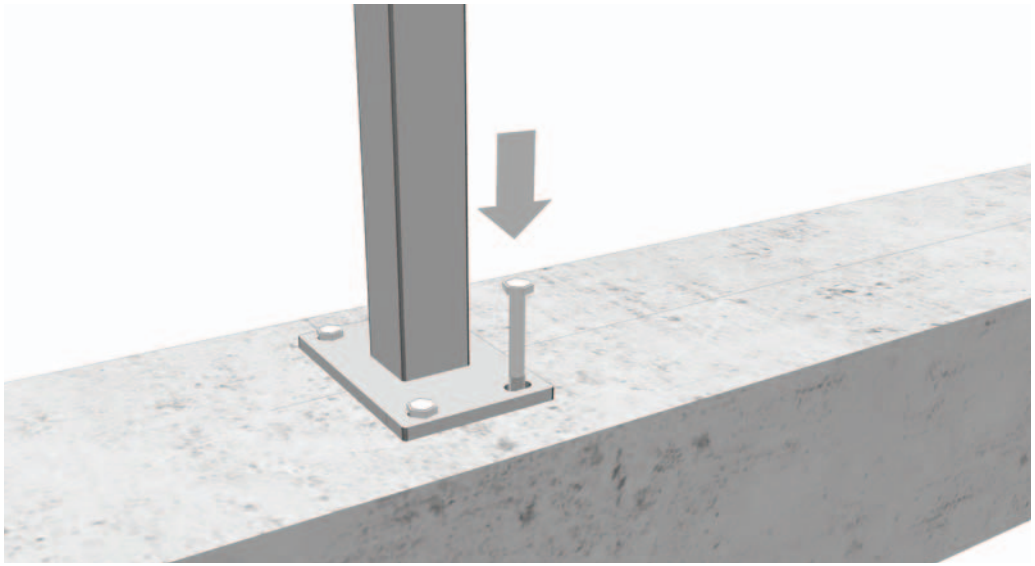

D Slide the fence post over the steel insert.

D

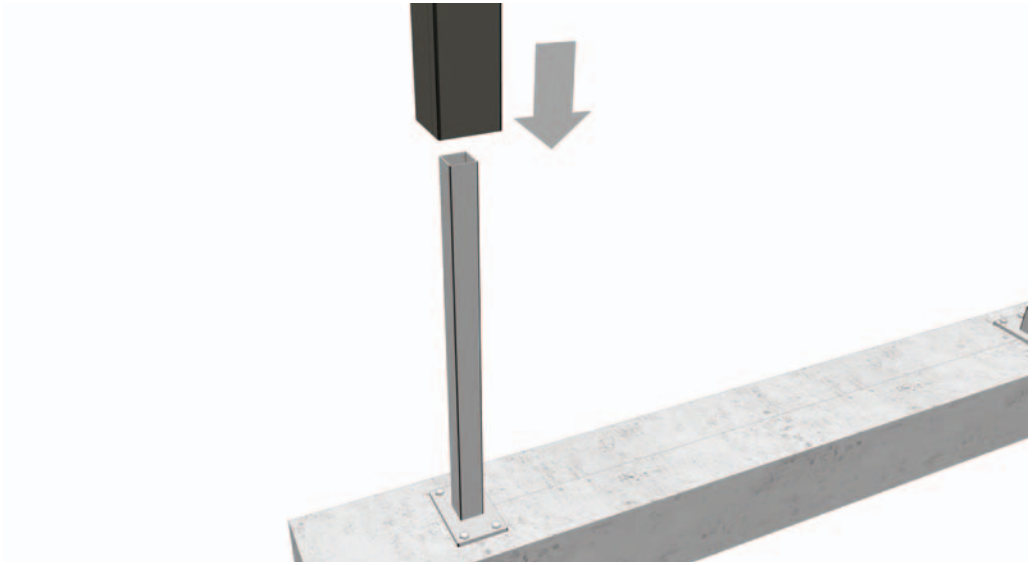

INSTALLATION - TO CONCRETE FOOTING OR BLOCK WALL

STEP 3

SECURE THE FENCE POST AND INSERT BOARDS

E To secure the composite fence post to the fence base plate, pre-drill through the H section of the composite post and insert a self tapper. Do this twice - 150mm from the bottom and 300mm from the bottom. Self tappers are included with the base plate.

E

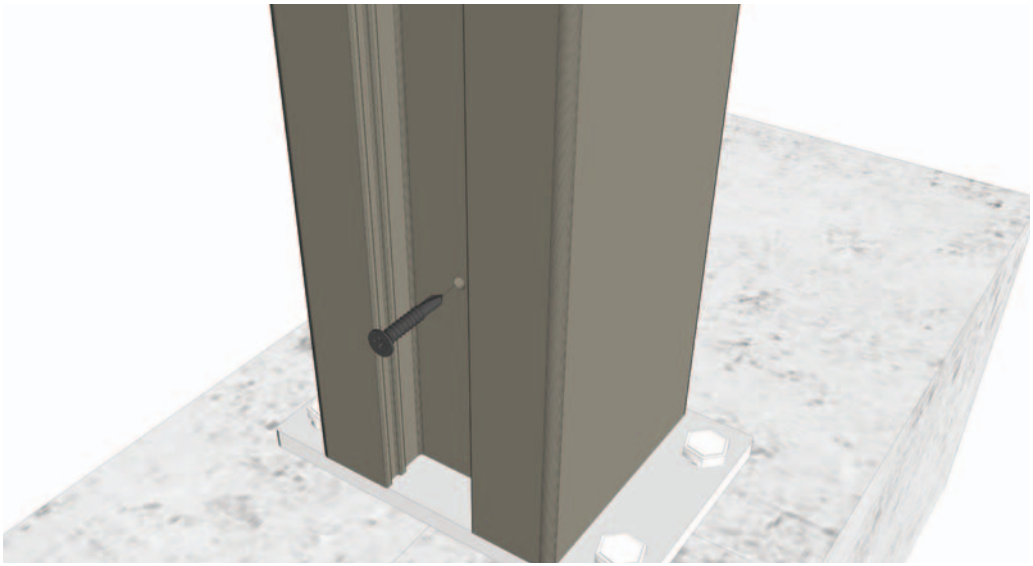

F Insert the fence boards (with the board inserts fitted), secure clips and post caps as per option 1.

F

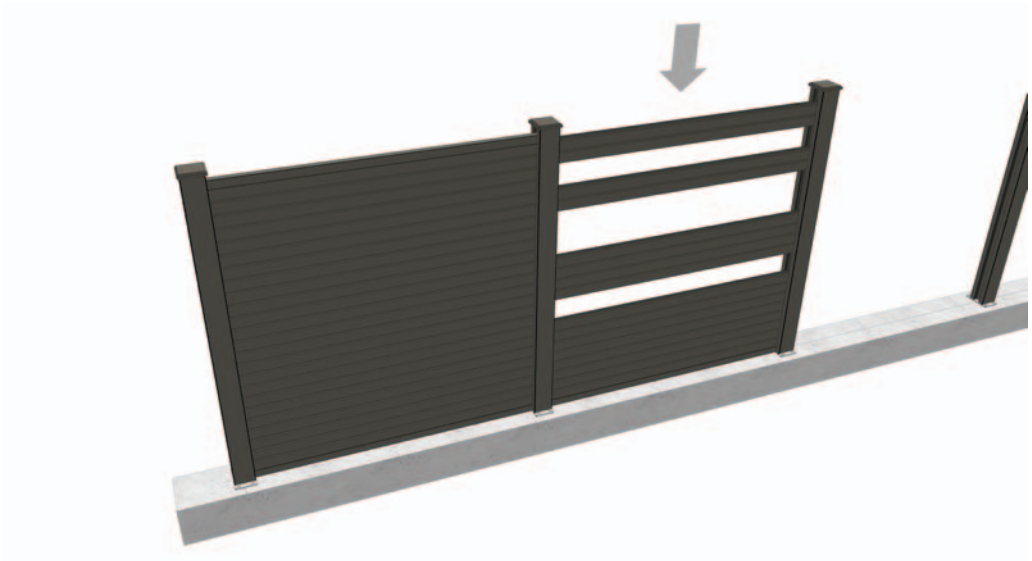

INSTALLATION - TO CONCRETE FOOTING OR BLOCK WALL

STEP 4

FINISH THE REMAINING PANELS

G Install the remaining panels and give the fixing bolts one final check to make sure they're tight. Fit the plastic cover caps over the bolts.

G



Job Done!

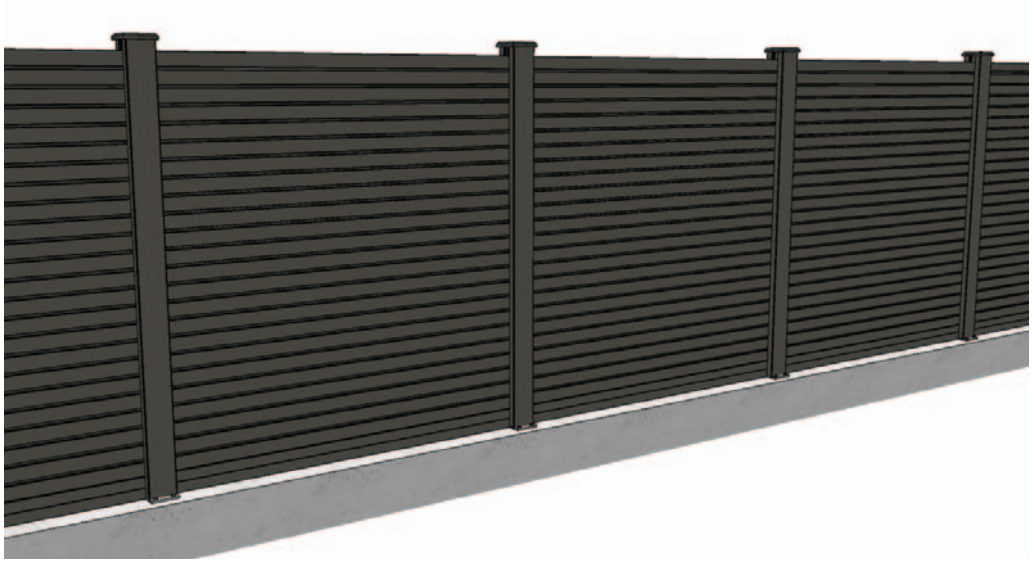

INSTALLATION - RETROFIT

STEP 1

INSERT FENCE PANELS

A With our fence boards being 45mm x 1830mm they can be slotted straight into existing concrete posts (based on a concrete post having a slot at 46.5mm – some may vary and will need packing).

Same thickness board as a timber panel, so no need for wedges or aluminium trims!

Simply take out your old timber fence panel and replace with the Ecoscape composite fence board. They just simply stack on top of one another!

Before each board goes in, fit an aluminium board insert as shown on page 18: in the bottom board, the top board and every third board in between.

A



B Use packers to secure the boards where required.

B

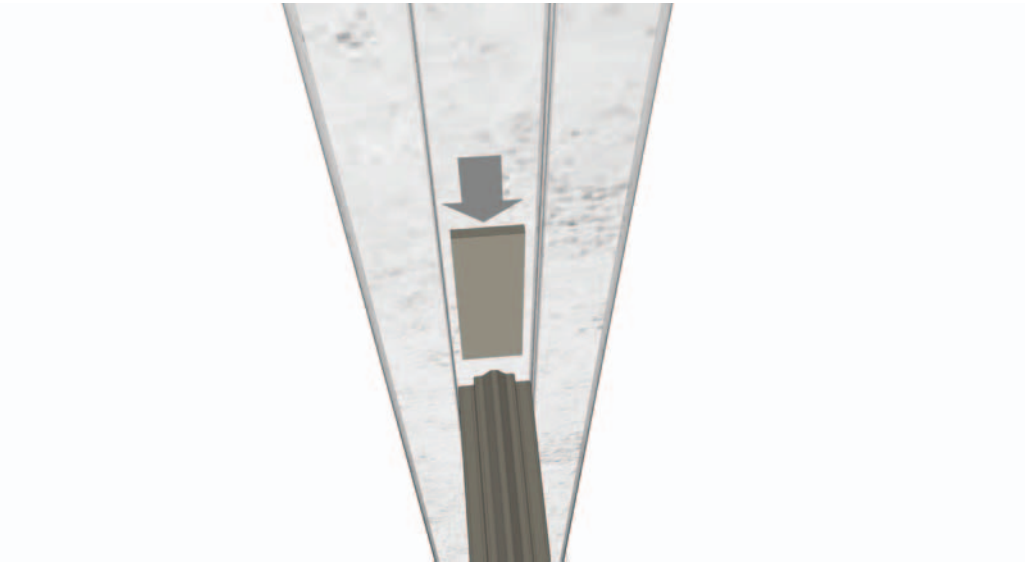

INSTALLATION - RETROFIT

STEP 2

INSTALL REMAINING BOARDS

Job Done!

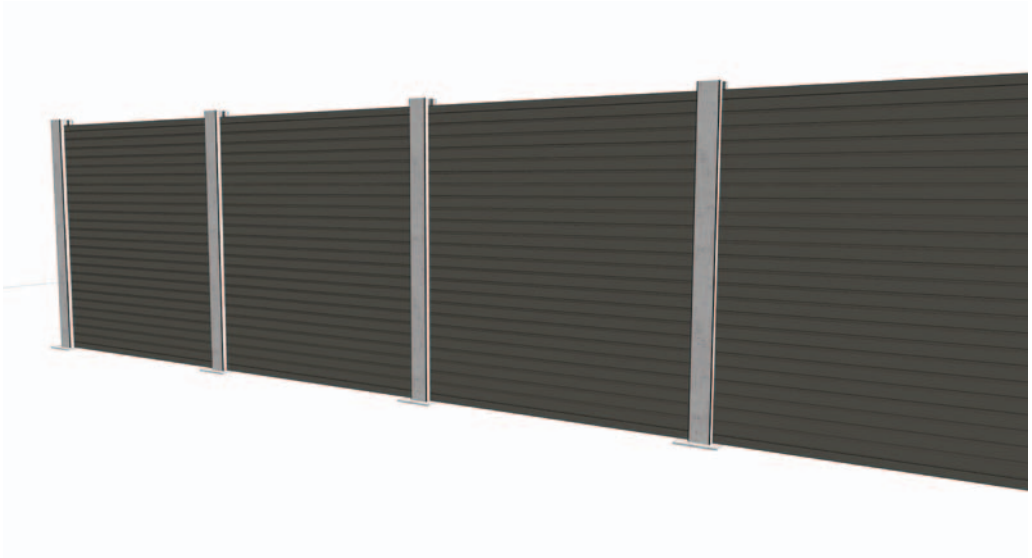

INSTALLATION - COMPLETE

Enjoy your new fencing!

To replace any panels simply follow the installation instructions



CLEANING AND CARE

ECOSCAPE Fencing boards will require periodic maintenance to remove the build up of dirt and debris. We recommend the fencing is cleaned once or twice a year using either:

- A high pressure cleaner (Jet wash) with a fan shaped beam at a distance of at least 20cm in a lengthwise direction, or;

- Scrubbing brush with an all-purpose cleaner and water

Burn marks, from BBQs or similar can also be removed using a coarse piece of sandpaper (80 grit or similar), by rubbing the fence boards length-ways gently.

Higher Broadfield Farm
Off Pilsworth Road
Heywood, Greater Manchester
OL10 2TA

T: 01706 364 637
E: sales@ecoscape.co.uk
W: ecoscape.co.uk

ecoscape®

OUTDOOR ARCHITECTURAL MATERIALS