ecoscape®

COMPOSITE DECKING

February 2024

www.ecoscape.co.uk
01706 364 637
sales@ecoscape.co.uk

Installation Guide



DECKING RANGES:



FORMA



CLARITY



LINEA



GRANDE

CONTENTS

STORAGE & HANDLING – 03

TOOLS – 03

SAFETY & USE – 04

CALCULATING BOARDS – 05

DECKING COMPONENTS & ACCESSORIES – 06

SUBSTRUCTURE & ACCESSORIES - 10

PRE INSTALLATION NOTES – 11

FALLS AND GRADIENTS – 12

INSTALLATION OF SUBSTRUCTURE – 13

INSTALLATION – 17

INSTALLATION - FINISHING THE DECK - 29

CLEANING & CARE – 37

EXPANSION GAP TABLE – 38

REMOVING A BOARD – 39

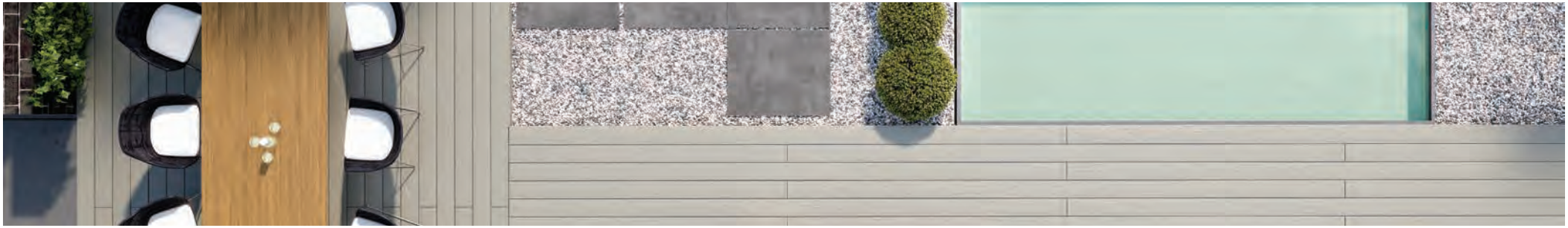

STORAGE & HANDLING

Whilst our composite materials are highly durable we do recommend you follow the below guidelines for storage, handling and installation, to ensure products are kept in the best possible condition.

Storage

- Materials should be stored under cover, in shade, and protected from weather until ready to install.
- Materials should be covered and kept dry until ready to install to ensure a clean surface.
- All composite products should be stored supported above the ground at 500mm intervals on a flat clean surface. Supporting battens used in storage should align through the stack to equally transfer the load.
- Decking boards must be stacked on top of each other.
- Where multiple pallets are delivered these should not be stacked higher than 3m per stack.
- Ecoscape will not be held responsible for issues that arise from poor storage.

Handling

- Decking materials should be placed and not dumped when unloading. Boards should be lifted and set down with care to avoid damage. Do not slide boards over one another.
- Decking boards should be carried in the middle and on their edge for best support when moving.
- During installation, avoid sliding or dragging any equipment across the board surface to avoid tarnishing the surface.
- The surface of the decking boards should be kept free of construction debris and material to prevent damage to the boards.
- As with all sites, surfaces should be kept clean and tidy for the best installation outcome.

TOOLS

Recommended tools to install Ecoscape's Composite Decking

Standard woodworking tools can be used when working with Ecoscape decking. If you are unsure on how to use any tool, please consult the tool manufacturer's user manual.

- Circular Saw - we recommend a 60T+ aluminium/laminate multipurpose blade to achieve the cleanest cuts.
- Mitre Saw - extremely useful
- Jig Saw
- Hand Drill
- 3mm and countersink drill bits (SmartBit countersink tool available from Ecoscape)
- Tape Measure
- Set Square
- Stringline
- Spirit Level
- Protective eye wear and relevant Personal Protection Equipment (PPE)
- Pencil

SAFETY & USE

Prior to installing any composite system we recommend that you consult local building regulations for any special requirements or restrictions that may apply. The illustrations and accompanying instructions in this guide are for illustrative purposes to provide a typical installation scenario, and do not replace the advice of a licensed professional in the field.

Safety

- Personal Protective Equipment (PPE) should be worn at all times during installation (COSHH Assessment summary available). When cutting and installing boards it is advised to wear gloves, protective eye wear, a dust mask, long sleeves and trousers.
- Dry and windy environments may result in a naturally occurring static build-up in composite products. The level of static build up will not cause personal injury.
- All composite decking boards MUST be installed on a substructure to allow adequate air flow beneath - this prevents any excessive water absorption. Boards cannot be laid directly onto a flat surface. A minimum of 25mm clearance beneath the decking should be provided to allow adequate drainage and ventilation.
- Excessive heat may be felt on the surface of the composite decking products from external sources such as reflection of sunlight from Low-E glass. This may cause an unusual heat build-up on any exterior surfaces. Excessive heat exposure may cause boards to sag or warp, expansion/contraction at increased levels, accelerated weathering, and in extreme circumstances melt the board surface.

  Note: A rise to such adverse levels is deemed extremely unlikely in the UK due to the stable climate.

Use

- Standard woodworking tools can be used to install our composite products. When using a chop saw we would recommend a 60T+ multipurpose aluminium blade for maximum efficiency and neatness on cuts.
- We recommend the Ecoscape screws provided with the T-Clips for installation of the boards - using any other screw system will invalidate the installation warranty. All fixings should be fastened at 90 degrees to the decking system.
- Before starting, it is imperative to plan your decking to ensure the best looking layout is achieved. We would recommend paying particular attention to fixed elements such as door thresholds, gutter outfalls and walls in order to determine the optimal laying pattern and starting position of the first boards.
- Ecoscape's composite decking boards are NOT intended for use as primary load bearing members. I.e. cantilevered structures, supports, beams or stringers.
- Boards must be supported by a compliant substructure at ≤ 400mm* centres and absolutely CANNOT be installed onto existing decking boards.

  ** 350mm centres for Linea decking*

CALCULATING BOARDS

To determine how much Ecoscape decking material will be required, you can either use detailed plans or follow the method below.

Alternatively, contact one of our composite experts at technical@ecoscapeuk.co.uk

1. Start by measuring the width and length of your proposed decking area(s).
2. Plan which direction to lay your decking.
3. If the boards are laid lengthways, to find the number of board rows, divide the deck width by the width of the boards (see below), plus a 5mm spacing per board to allow for the hidden T-Clip.

   Ecoscape composite decking board sizes:

   - **FORMA:** 25mm (H) x 150mm (W) x 3000mm or 4800mm (L)
   - **CLARITY:** 25mm (H) x 150mm (W) x 3000mm or 4800mm (L)
   - **LINEA:** 23mm (H) x 140mm (W) x 3600mm or 4800mm (L)
   - **GRANDE:** 22mm (H) x 225mm (W) x 3600mm (L)

   For example, for a decked area 3.1m wide x 6m long, using Forma boards (150 x 25mm) with 5mm hidden T-Clips:

   3.1m width / (0.150m + 0.005m) = 20 boards wide

4. Now multiply the length of the deck by the number of boards wide (given above). This gives you the total linear metres of deck boards required:

   6m length x 20 boards wide = 120 linear metres

5. Next, divide the total linear metres of decking by the length of board being used:

   120 linear metres / 3.0m board length = 40 lengths of 3.0m decking boards

6. Finally, multiply the number of total boards by 1.05 to include for 5% wastage:

   40.0 x 1.05 = 42.0 = 42 boards

The same method of calculation can be used to work out the number of boards required to the vertical fascias of the deck.

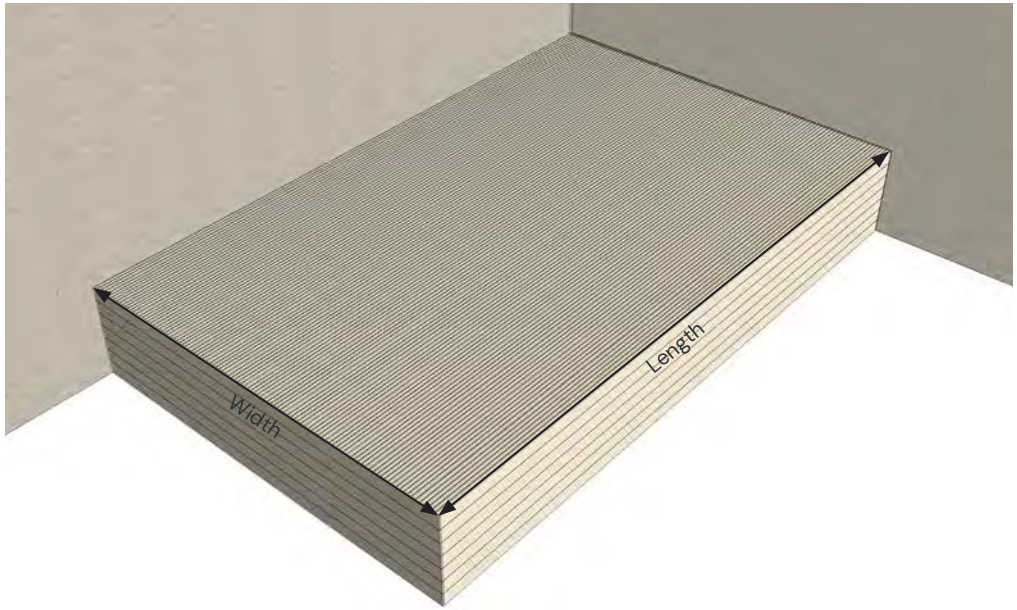

FORMA DECKING COMPONENTS & ACCESSORIES



Decking Board
-
25x150x3000mm
25x150x4800mm
7 colours
Woodgrain on one side, grooves on the other.

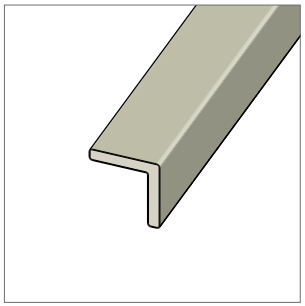

Angle Trim
-
40x40x3000mm
8mm trim thickness
6 colours



Flat Fascia Trim
-
10x150x3000mm
6 colours
Woodgrain on one side, grooves on the other.

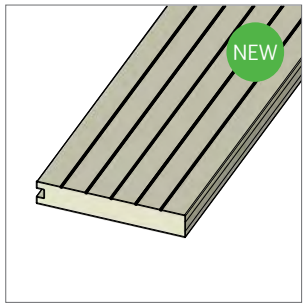

Solid Edge Board
-
25x150x3000mm
6 colours
Woodgrain on one side, grooves on the other.



Hidden Screws
-
Black screws for use with Solid Edge Board.



Composite Plugs
-
Colour matched to decking board. Use with Solid Edge Board and Hidden Screws.

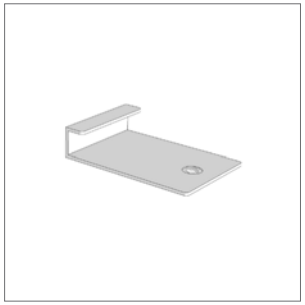

Start/Finish Clip (Steel)
-
50pcs/pack, 1 on every joist on starting/finishing edges.



Hidden T-Clip (Plastic) & Screw
-
250pcs/pack, 15sqm coverage. Screw comes pre-inserted.



Locking Clip (Steel) & Screw
-
50pcs/pack, 1 used per board, controls expansion. Screw comes pre-inserted.



Colour Coded Screws
-
40mm or 63mm length. Head colour matched to decking board.

Colour Coded Screws

Colour coded screws are supplied with screw heads powder coated to match our composite decking boards, using the nearest available RAL colours:

RAL9005 for Midnight

RAL7037 for Flint

RAL1019 for Silver Birch

RAL8028 for Havana

RAL8001 for Spiced Oak

RAL7015 for Argent

CLARITY DECKING COMPONENTS & ACCESSORIES



Decking Board
-
25x150x3000mm
25x150x4800mm
3 colours
Narrow grooves on one side, wide grooves on the other.



Angle Trim
-
42x42x3000mm
6mm trim thickness
3 colours



Flat Fascia Trim
-
15x150x3000mm
3 colours available
Narrow grooves on one side, wide grooves on the other.



Solid Edge Board
-
25x150x3000mm
3 colours
Available with narrow or wide grooved pattern.

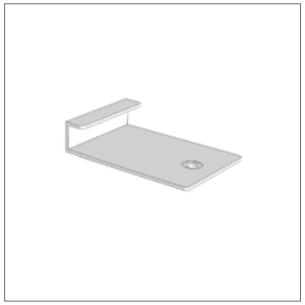

Start/Finish Clip (Steel)
-
50pcs/pack, 1 on every joist on starting/finishing edges.

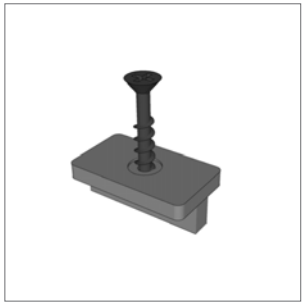

Hidden T-Clip (Plastic) & Screw
-
250pcs/pack, 15sqm coverage. Screw comes pre-inserted.



Locking Clip (Steel) & Screw
-
50pcs/pack, 1 used per board, controls expansion. Screw comes pre-inserted.



Colour Coded Screws
-
40mm or 63mm length. Head colour matched to decking board.

Colour Coded Screws

Colour coded screws are supplied with screw heads powder coated to match our composite decking boards, using the nearest available RAL colours:

RAL9005 for Charcoal

RAL7037 for Graphite

RAL8028 for Walnut

LINEA DECKING COMPONENTS & ACCESSORIES

NEW

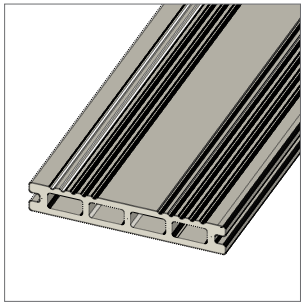

Decking Board
-
23x140x3600mm
23x140x4800mm
5 colours
Traditional groove one side, straight grain on the other.

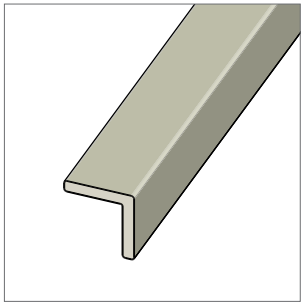

Angle Trim
-
40x40x3600mm
5 colours

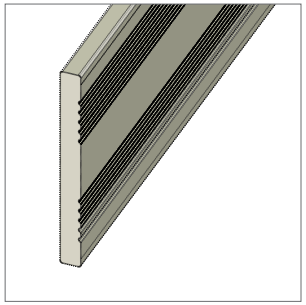

Flat Fascia Trim
-
15x150x3600mm
5 colours
Traditional groove one side, straight grain on the other.

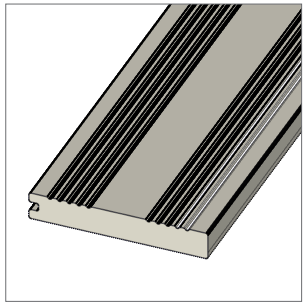

Solid Edge Board
-
23x140x3600mm
5 colours
Traditional groove one side, straight grain on the other.



Hidden Screws
-
Black screws for use with Solid Edge Board.



Composite Plugs
-
Colour matched to decking board. Use with Solid Edge Board and Hidden Screws.

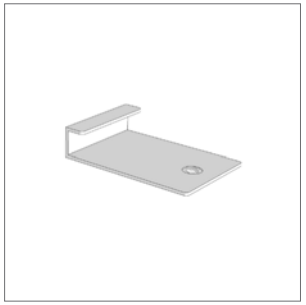

Start/Finish Clip (Steel)
-
50pcs/pack, 1 on every joist on starting/finishing edges.



Hidden T-Clip (Plastic) & Screw
-
250pcs/pack, 12.25sqm coverage. Screw comes pre-inserted.



Locking Clip (Steel) & Screw
-
50pcs/pack, 1 used per board, controls expansion. Screw comes pre-inserted.



Colour Coded Screws
-
40mm or 63mm length. Head colour matched to decking board.

Colour Coded Screws

Colour coded screws are supplied with screw heads powder coated to match our composite decking boards, using the nearest available RAL colours:

RAL9005 for Onyx

RAL7037 for Slate

RAL7037 for Granite

RAL8028 for Umber

GRANDE DECKING COMPONENTS & ACCESSORIES

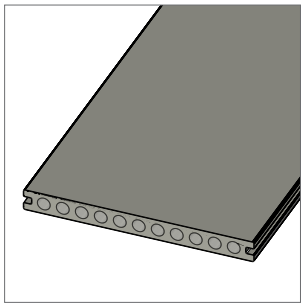

Decking Board
-
22x225x3600mm
Chateau on one side,
Dovetail on the other.

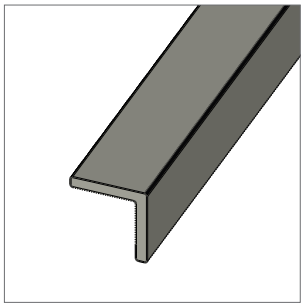

Angle Trim
-
50x50x3000mm
Available in Chateau or Dovetail.

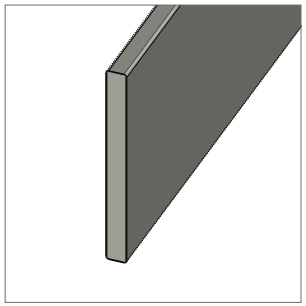

Flat Fascia Trim
-
15x150x3000mm
Available in Chateau or Dovetail.

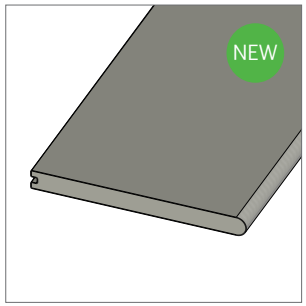

Solid Edge Board
-
22x225x3600mm
4 colours
Available in Chateau or Dovetail.



Hidden Screws
-
Black screws for use with Solid Edge Board.



Composite Plugs
-
Colour matched to decking board. Use with Solid Edge Board and Hidden Screws.

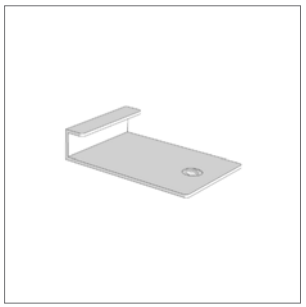

Start/Finish Clip (Steel)
-
50pcs/pack, 1 on every joist on starting/finishing edges.



Hidden T-Clip (Plastic) & Screw
-
250pcs/pack, 22.5sqm coverage. Screw comes pre-inserted.



Locking Clip (Steel) & Screw
-
50pcs/pack, 1 used per board, controls expansion. Screw comes pre-inserted.



Colour Coded Screws
-
40mm or 63mm length.
Head colour matched to decking board.

Colour Coded Screws

Colour coded screws are supplied with screw heads powder coated to match our composite decking boards, using the nearest available RAL colours:

RAL1019 for Chateau

RAL1019 for Dovetail

FORTE SUBSTRUCTURE & ACCESSORIES

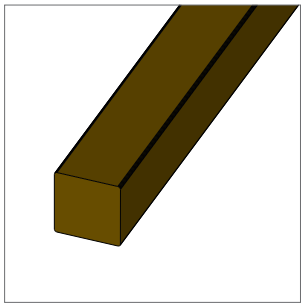

Plastic Decking Joist
-
50x50x2400mm, made from 100% recycled materials, won't rot or splinter, 25 year warranty.

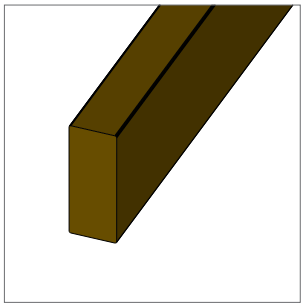

Plastic Decking Joist
-
50x125x3000mm, made from 100% recycled materials, won't rot or splinter, 25 year warranty.

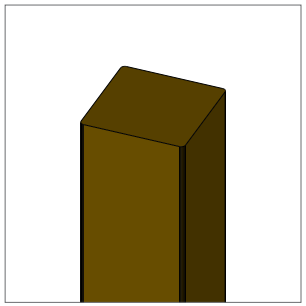

Plastic Decking Post
-
100x100x3000mm, made from 100% recycled materials, won't rot or splinter, 25 year warranty.



Aluminium Joist
-
40x40x3600mm, made from recycled aluminium, won't rot or splinter, 25 year warranty.

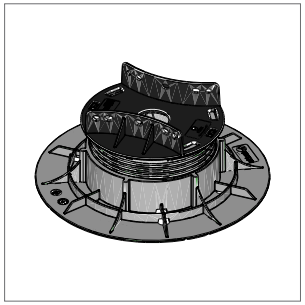

Queen Pedestal
-
21mm - 1225mm height, option of self levelling head, anti noise head, 100% recycled polypropylene, load capacity up to 1509kg.

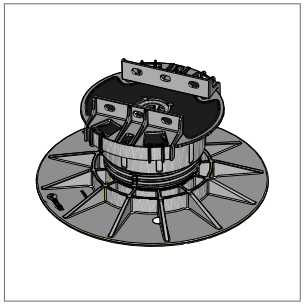

King Pedestal
-
30mm - 1089mm height, fixed or self levelling base, anti noise head, 100% recycled polypropylene, load capacity up to 1800kg.



Decking Tape, 54mm width
-
20m length, preserves your timber decking frame, 25 year warranty. Repositionable, self-seals. Made from recycled plastic.



Decking Tape, 100mm width
-
20m length, preserves your timber decking frame, 25 year warranty. Repositionable, self-seals. Made from recycled plastic.

PRE INSTALLATION NOTES

Decking areas can take many forms and scales of complexity. The following guide portrays the steps to install the basic board system and side trim. The approach shown can be used to develop terraces and step details however these will require further planning and consideration.

The diagrams shown use an external grade timber sub-frame on which to fix the decking. Boards can also be fixed onto aluminium or solid plastic frames. Ecoscape are able to offer support with design approaches which vary from that shown here.

PLEASE NOTE:
Please refer to the Expansion Gap Table on p.38 when installing the deck boards to determine the gap (mm) between boards and adjacent structures.



Typical installation: Decking area adjacent to house.

FALLS AND GRADIENTS

Whilst not absolutely necessary, it is recommended that composite decking boards are installed at a 1% gradient. Boards laid parallel to the direction of fall will encourage water to shed via the pre-formed grooves in the boards, and so further reduce the risk of slipping when wet.

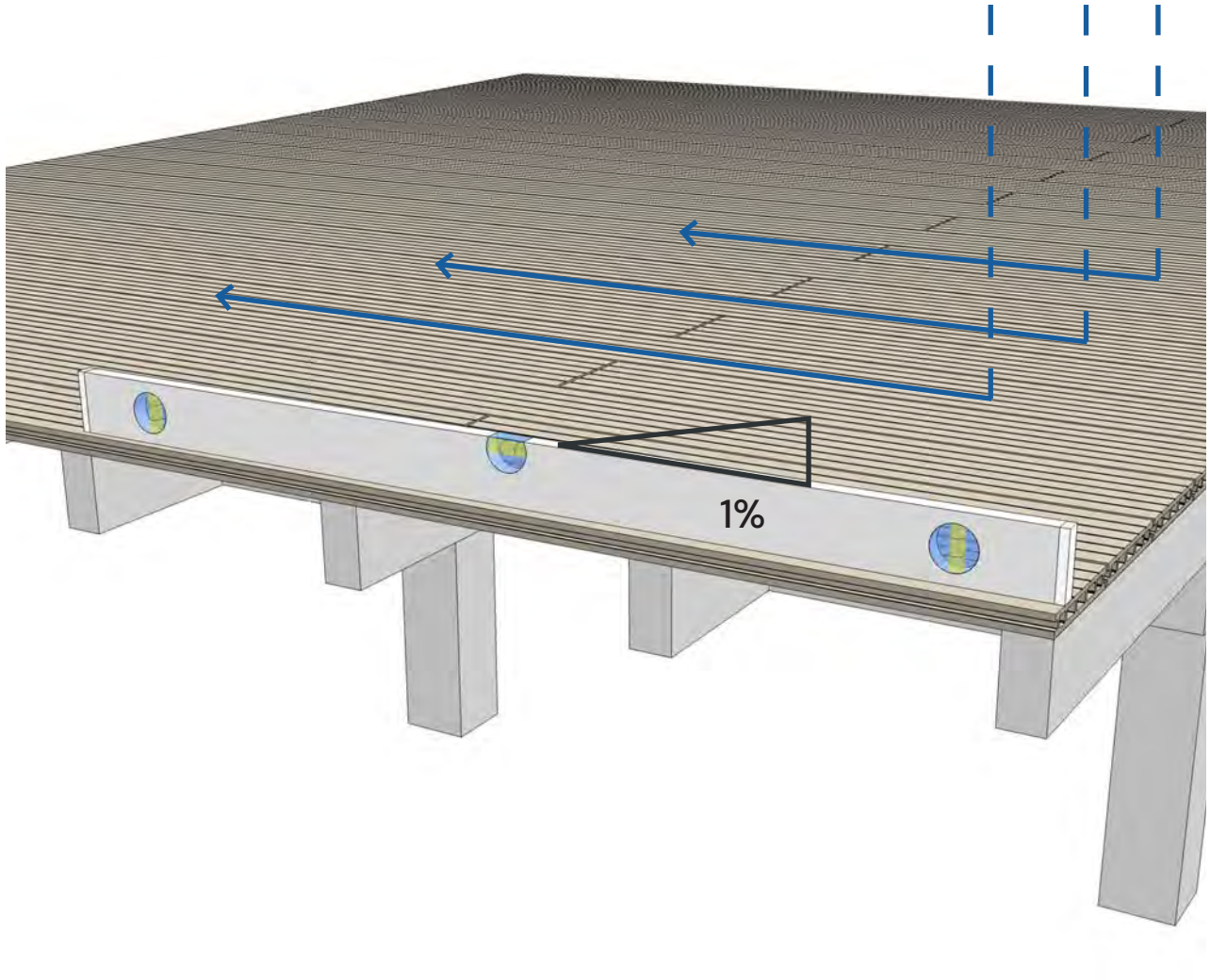

INSTALLATION OF SUBSTRUCTURE

TIMBER JOISTS

Decking Joist Layout:

Joists should be fixed to a secure post in a concrete foundation or similar.

Ecoscape are unable to accept any liability for the installation of inadequate sub-frames. The contractor should ensure the frame is adequately prepared.

Joist Specification:

- Decking can be fixed to pressure treated softwood timber joists (Grade C16 - EN14081 or similar) or composite / aluminium joists depending on design requirements.
- Joists should be fixed into position at 400mm centres* using suitable A4 stainless steel countersunk wood/masonry screws. All joists need to be fixed in a minimum of 3 places.
  ** 350mm centres for Linea decking*
- To protect your timber substructure, it is best practice to cover the top of the joists with Ecoscape's Decking and Cladding Tape to prolong the life of the timber - see overleaf for further information.

Typical timber sub-frame:

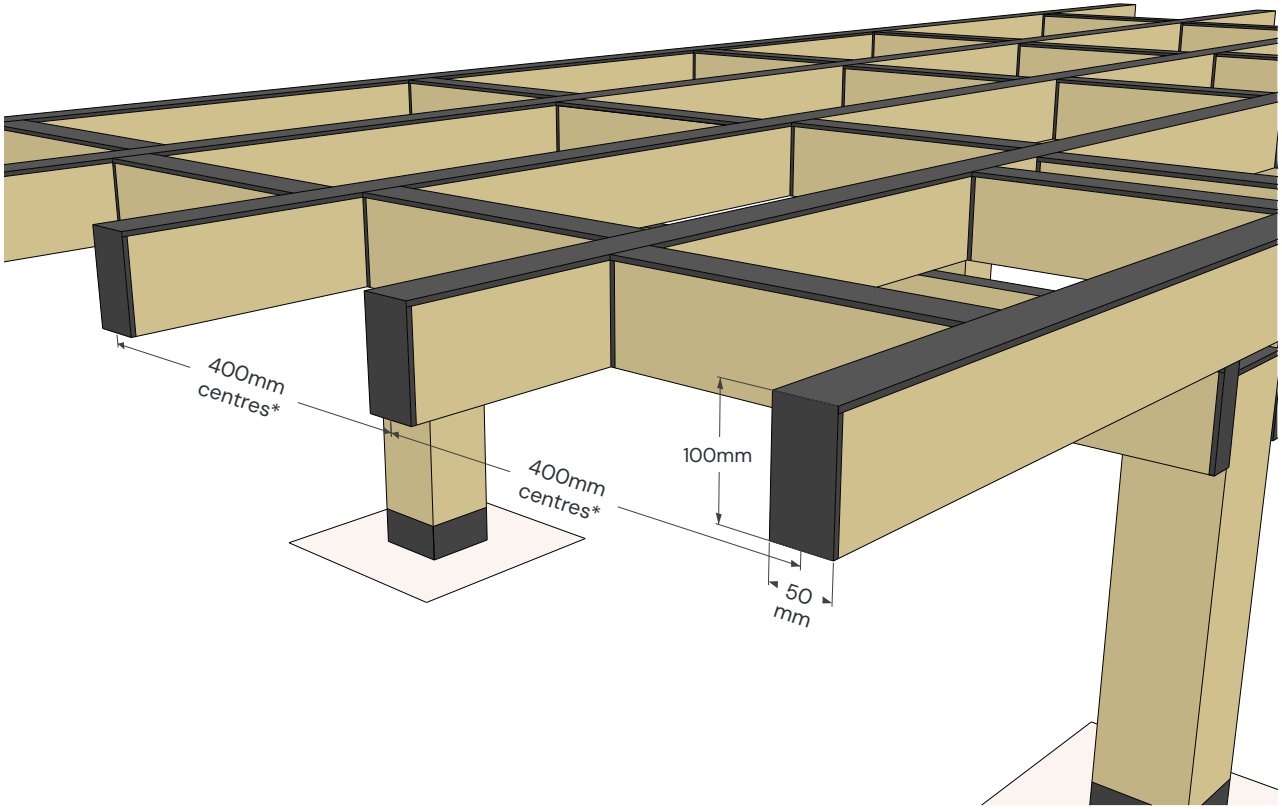

** 350mm centres for Linea decking*

INSTALLATION OF SUBSTRUCTURE

WEATHER PROOFING TIMBER JOISTS

To give your timber frame the longest lease of life, the best practice is to use Ecoscape's Decking and Cladding Tape on the following applications when installing:

1. **Noggins** - Wrap cut ends of timber noggins with tape to seal it off from all moisture and water, protecting it from rotting or weathering. Generally this is a particularly weak spot for the moisture to start rotting the timber since there will not be any treatment on this part as it has been cut to size.
2. **Joists** - Apply tape along the top of the joists as a 'cap', slightly overlapping the edge of the timber, to protect the timber and create a strong seal. This prevents any moisture sitting on these flat surfaces and slowly rotting away the timber (If you have any double or extra wide joists the tape can be overlapped as it adheres to itself and will still create a fully waterproof seal).

Tip: The tape can be applied to joists in advance of the deck boards being fitted - it doesn't deteriorate or affect the benefits or qualities that the tape brings to the deck.

Tape Coverage:
3.5m per m^2 (based on 400mm joist centres)

Coverage per 20m roll:
20m / 3.5m = 5.7m^2 coverage per roll

A typical 20m^2 of decking substructure will require 3 x 54mm wide tape rolls and 2 x 100mm wide tape rolls when using joists at 400mm centres.

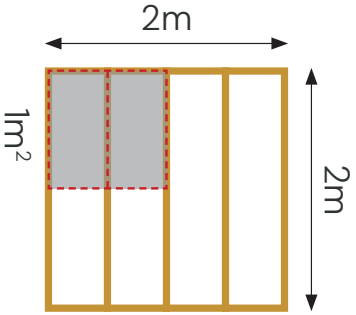

Wrap the cut ends of timber noggins with weather proofing tape.

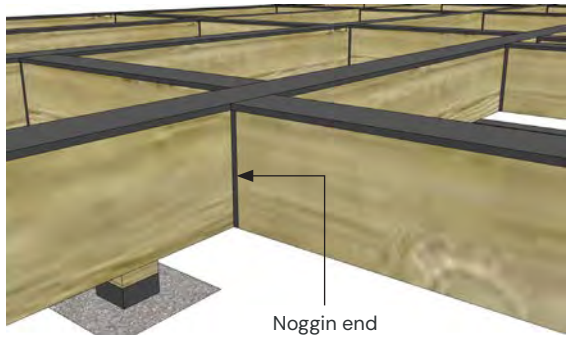

50mm Ecoscape Decking and Cladding Tape

Apply weather proofing tape to timber joists.

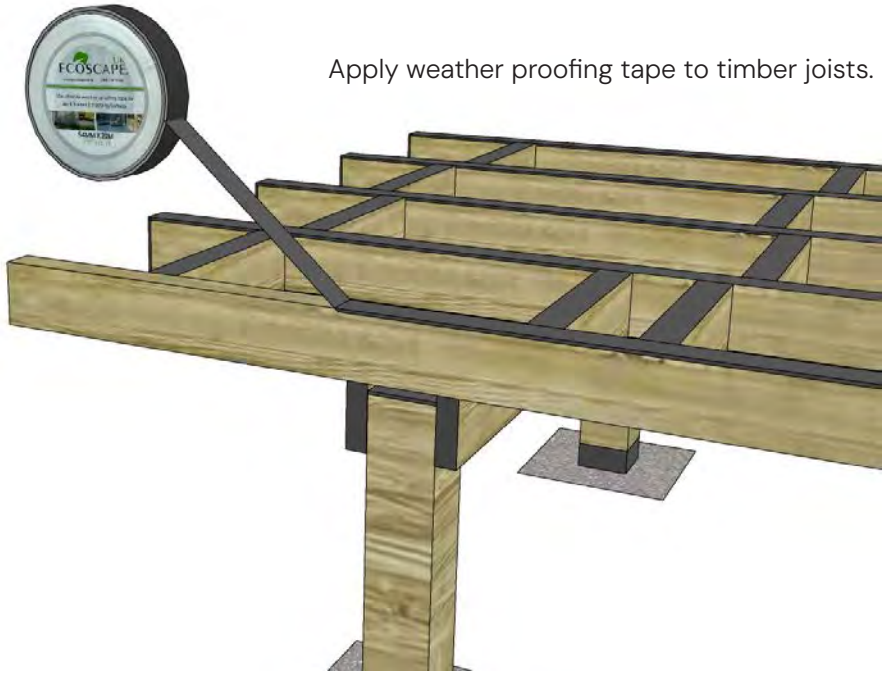

INSTALLATION OF SUBSTRUCTURE

WEATHER PROOFING TIMBER POSTS

You can also use Ecoscape's Decking and Cladding Tape to weather proof timber posts:

1. Apply a single wrap of 100mm tape around your post at such distance from the end so that the centre of the band of tape will be at the top of the concrete foundation into which the post is to be set.
2. With the wrap of tape applied, set the timber post into the concrete foundation so that approximately 50mm of decking tape remains above the concrete pad.
3. Finished! Your post will now have additional protection from rotting at the point of insertion into the ground, which is often caused by pooling of water on top of the concrete foundation.

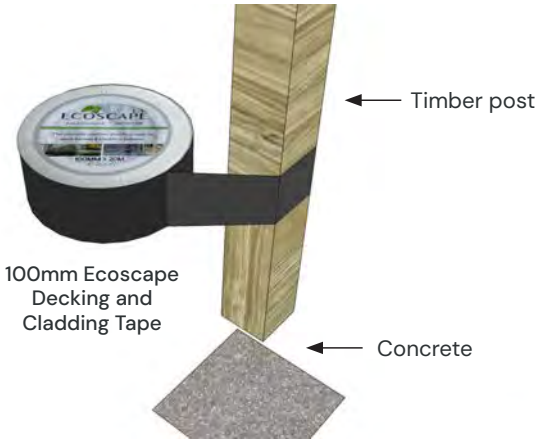

1. Wrap the post in tape.

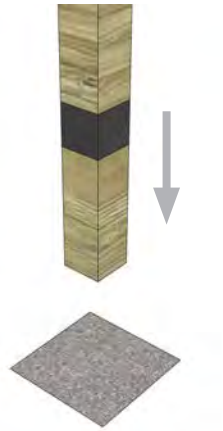

2. Set the post into the concrete foundation.



3. Finished

INSTALLATION OF SUBSTRUCTURE

ALUMINIUM OR PLASTIC JOISTS WITH PEDESTAL SYSTEM

Ecoscape offer aluminium or solid plastic substructures, these can be fixed to either:

- Adjustable pedestals, available from Ecoscape - with solid flat foundations and flat roof areas, the decking substructure can be supported with adjustable support pedestals. These are simply placed straight onto flat roofs or hard standing. The height of each is adjusted by rotating the pedestal head. 6 or 7 pedestals are recommended per m^2 (depending on detailing).
- Solid plastic posts (100 x 100mm), available from Ecoscape.
- Concrete blockwork or low walls.

Joists available from Ecoscape:

DESCRIPTION	SPAN	CENTRES
Plastic Joist, 50x50x2400mm	600mm	400mm*
Plastic Joist, 50x125x3000mm	1500mm	400mm*
Aluminium Joist, 40x40x3600mm	600mm	400mm*

** 350mm centres for Linea decking*

Plastic joist on adjustable pedestals.

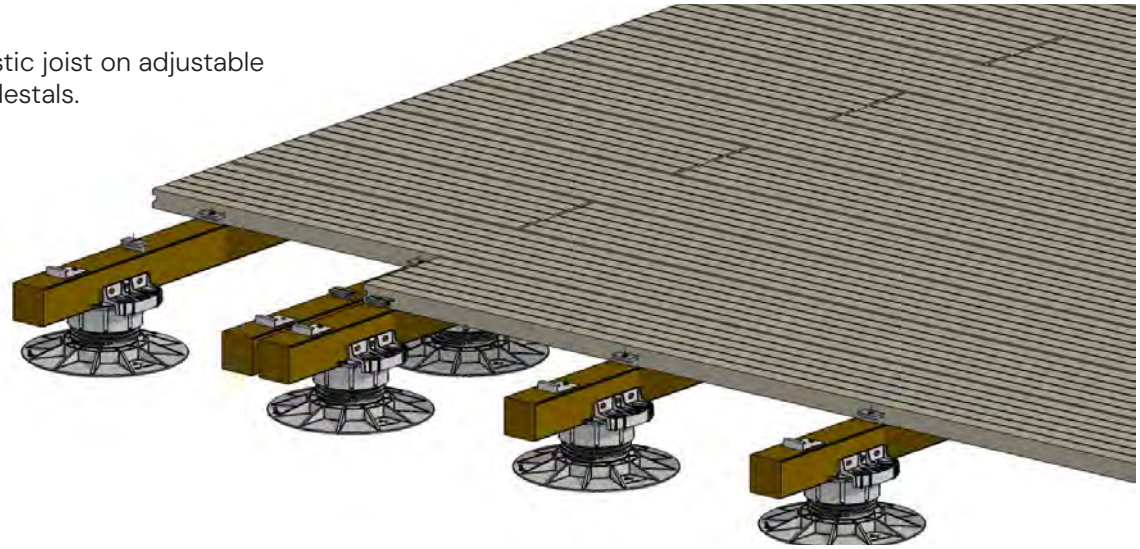

Aluminium joists on adjustable pedestals.

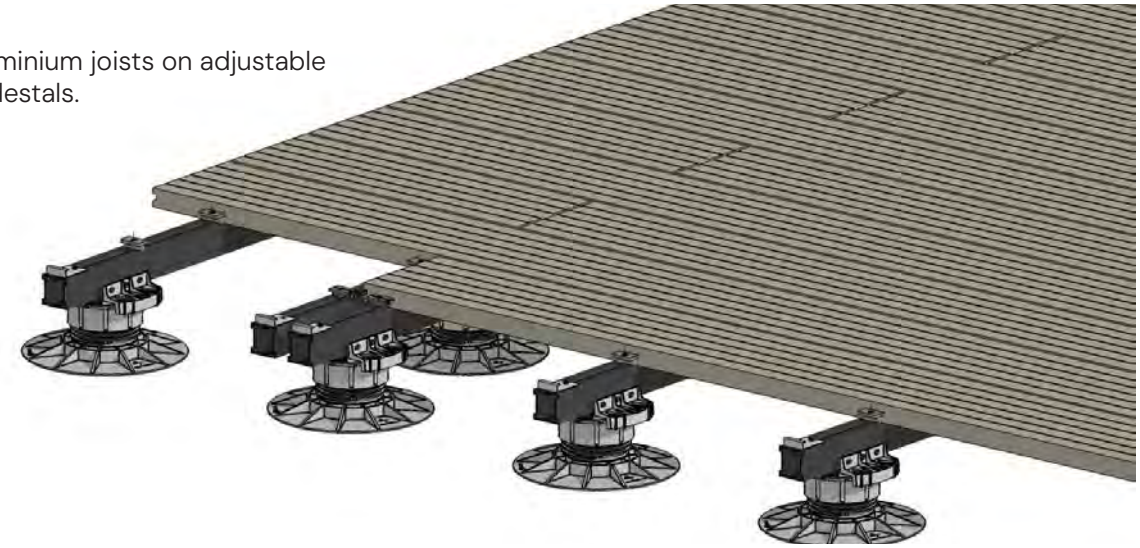

INSTALLATION

STEP 1

Orientation of decking boards

We recommend that decking boards are laid perpendicular to the direction of the sub-frame, however other configurations are possible.

Decking boards also function and look best when laid perpendicular to building line / door / viewing point.

There are a wide variety of laying patterns that can be achieved but these are not covered in this manual. Ecoscape are able to assist with the design of non standard laying patterns.

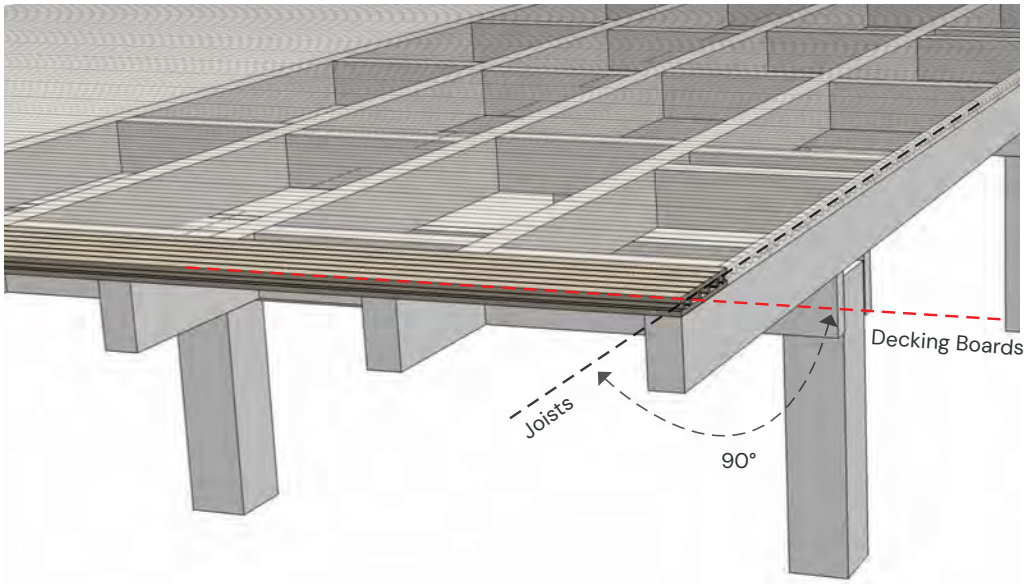

Please note: Deck board design will vary between ranges.

INSTALLATION

STEP 2

Fixing the starter clip

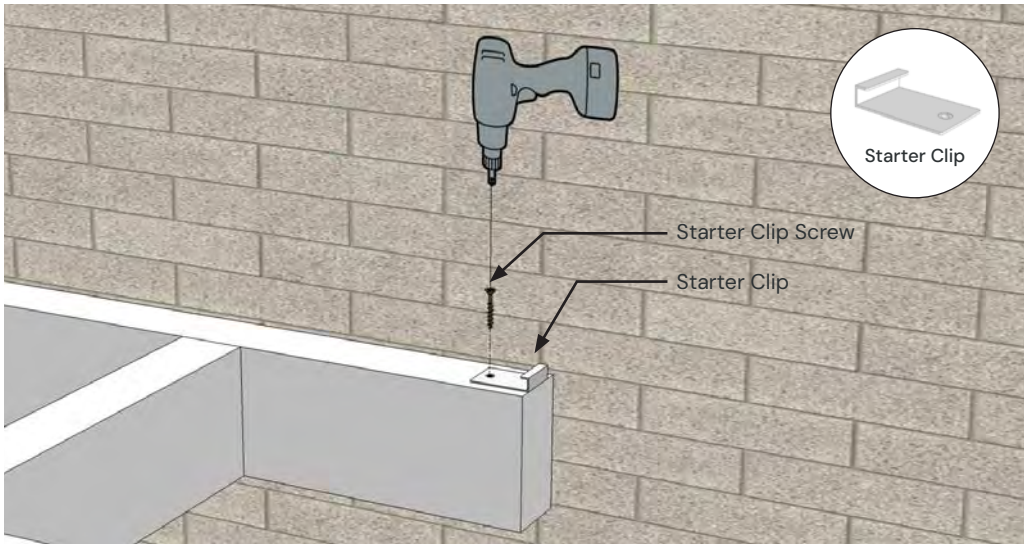

a)

Once you have determined the location and orientation of the first decking board, you are ready to install the first starter clip. Align the clip to the end and centre of the joist, pre-drill, and screw the starter clip in place using the starter clip screw.

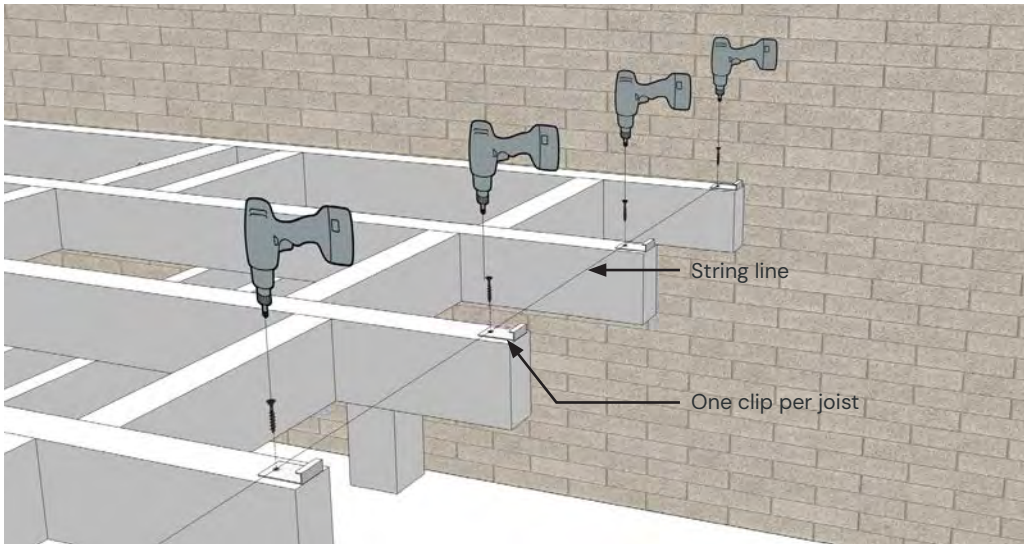

b)

Using a deck board or string line install the remaining starter clips, taking care to ensure they are aligned.

INSTALLATION

STEP 3

Install the first decking board

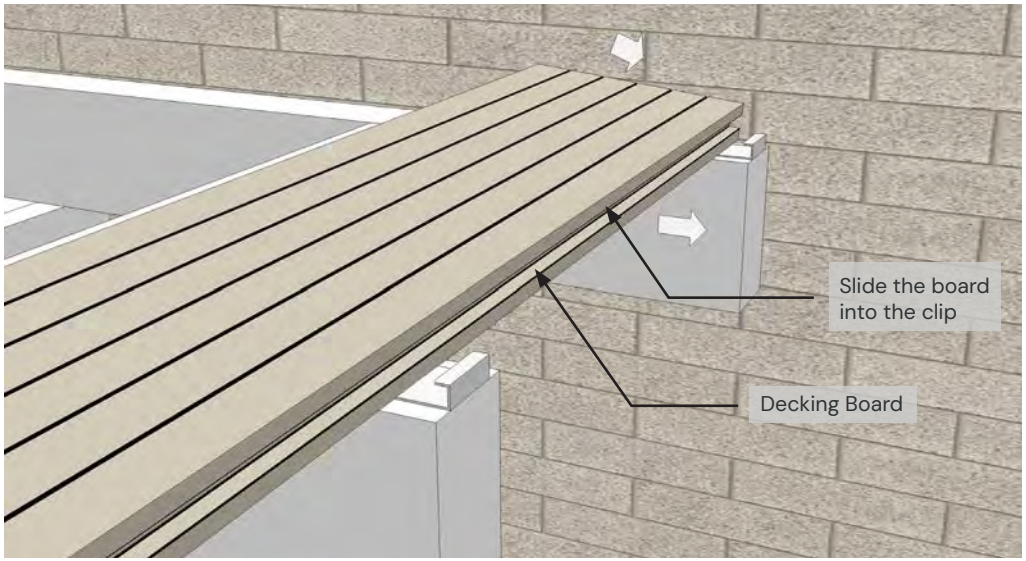

a)

Take the first board and slide it into the starter clip using the grooves in the side of the board.

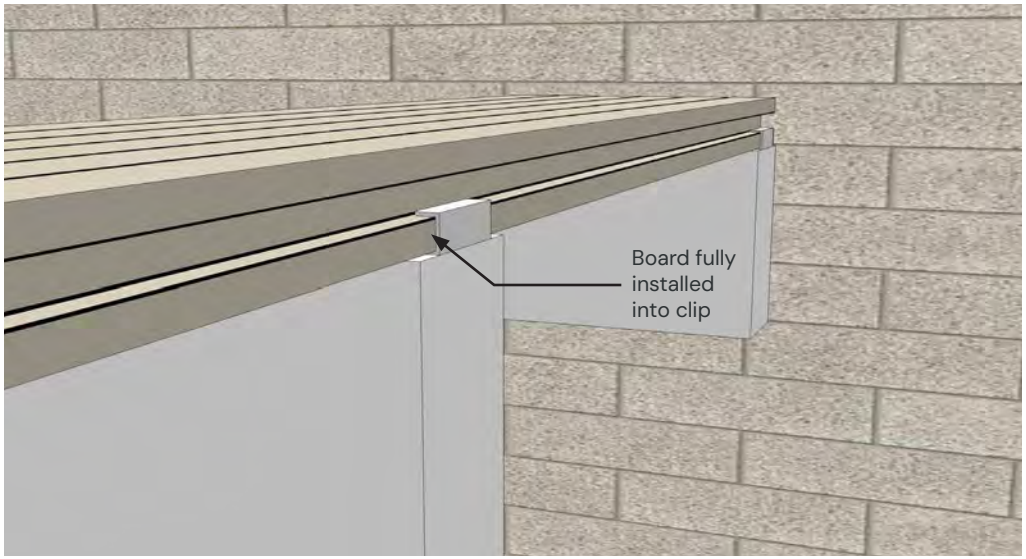

b)

Ensure the board is fully installed into the clip before proceeding.

Please note: Deck board design will vary between ranges.

INSTALLATION

STEP 4

Install the Hidden T-Clips

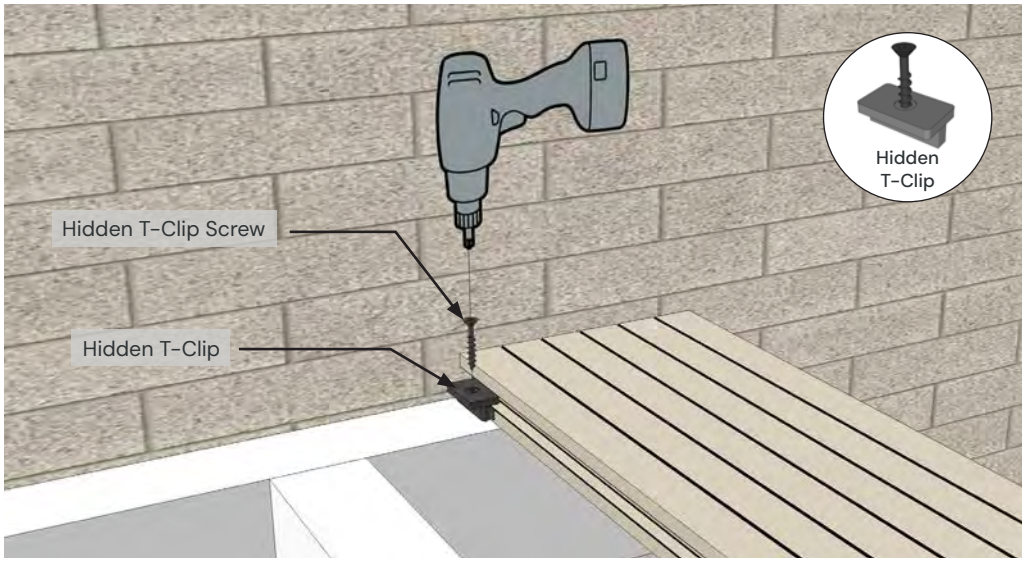

a)

Using the Hidden T-Clips, secure one end of the board in place by sliding the T-Clip into the side groove on the decking board and part screwing the T-Clip screw into the joist. Do not fully screw the T-Clip in place.

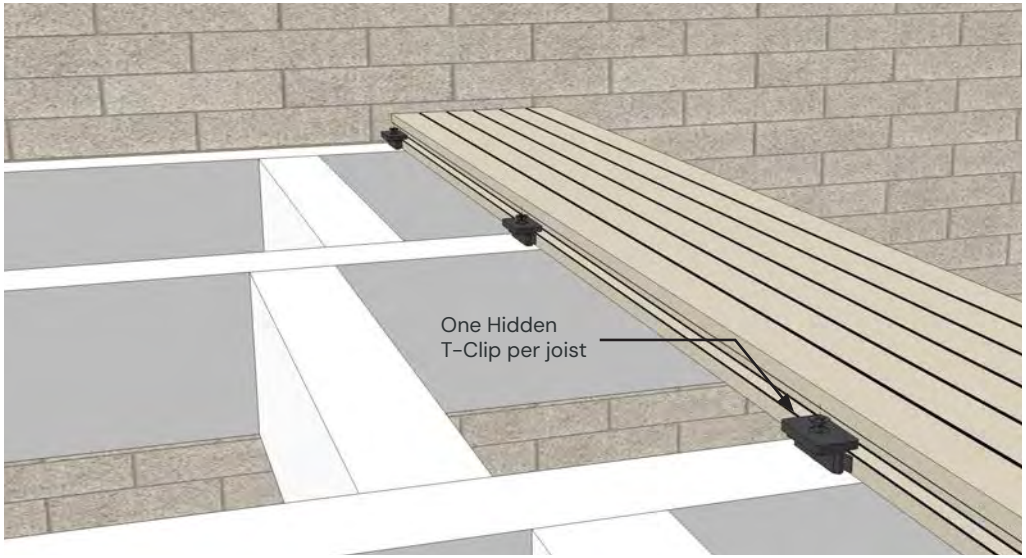

b)

Install the remaining T-Clips part way as above. One T-Clip should be installed per joist.

Please note: Deck board design will vary between ranges.

INSTALLATION

STEP 5

Install the Locking Clip

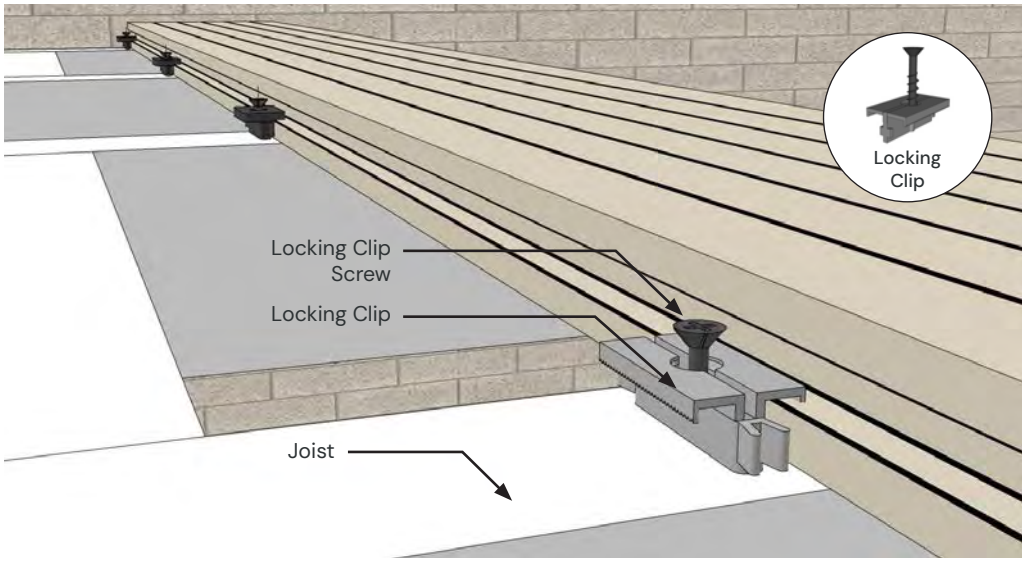

Plan view:

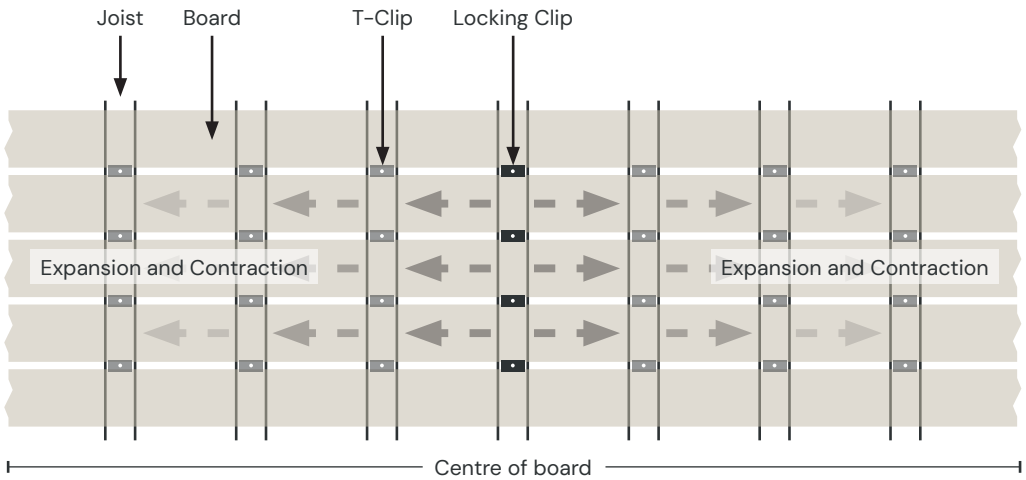

Ecoscape's Locking Clip is a similar profile to the T-Clip but with serrated teeth which lock the board in place. This ensures even expansion or contraction during hot or cold weather. One Locking Clip can be placed to the centre of each board where it hits the sub-frame. This will allow for the even expansion and contraction across the board length as shown in the diagram above.

Please note: Deck board design will vary between ranges.

INSTALLATION

STEP 6

Install the second decking board

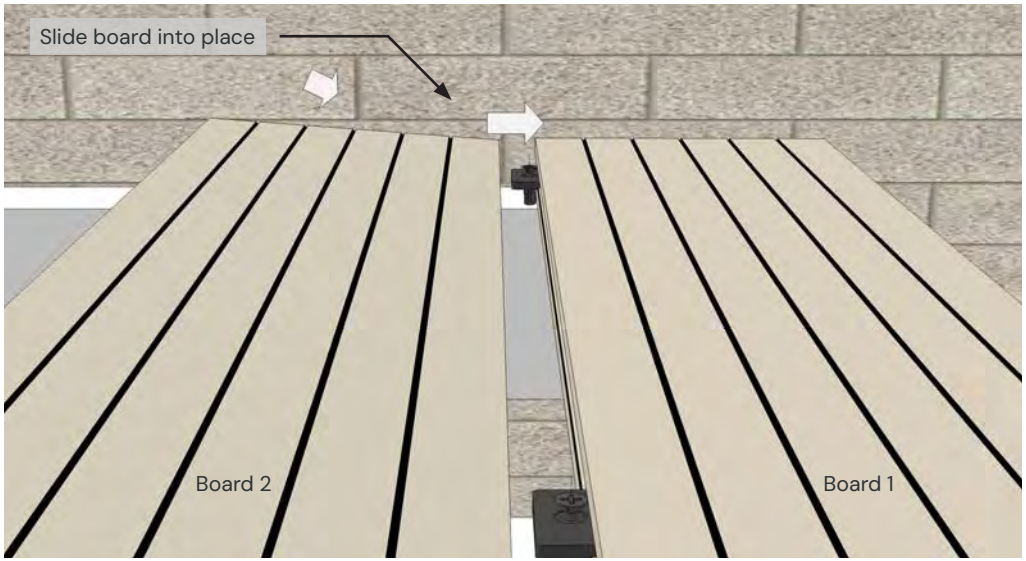

a)

Take the second decking board and slide into the T-Clip fixings.

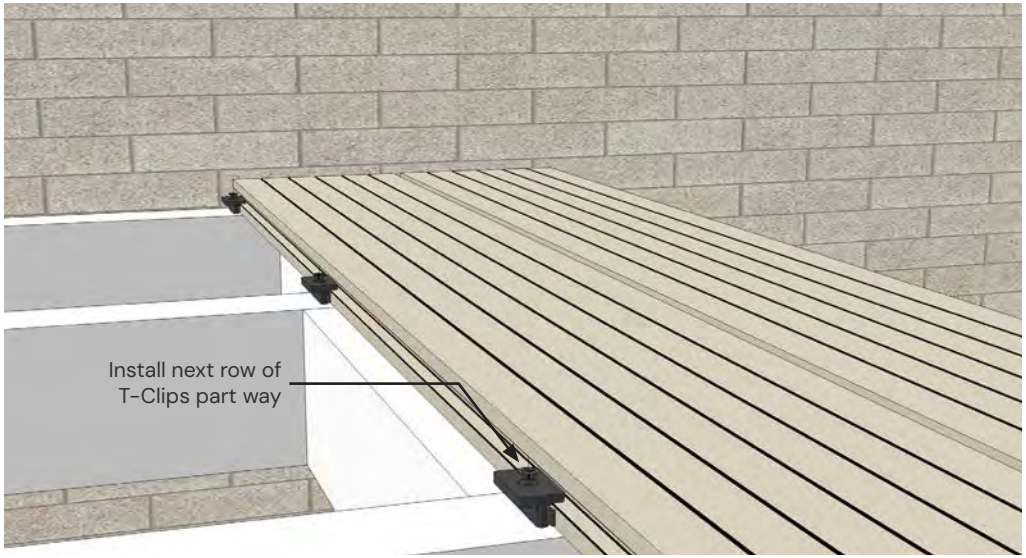

b)

Install the next row of T-Clips to board 2 as described in step 4.

Please note: Deck board design will vary between ranges.

INSTALLATION

STEP 7

Fully secure first set of T-Clips

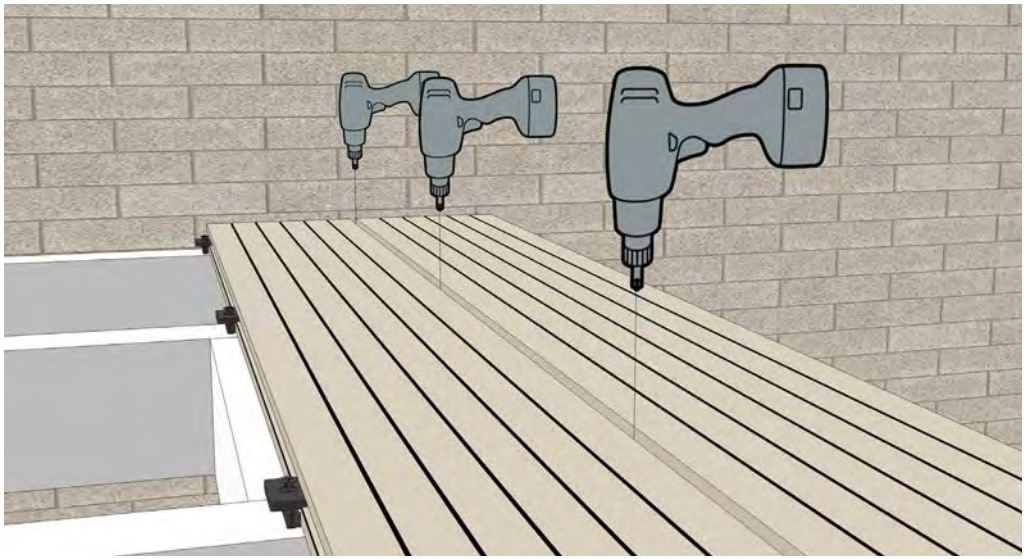

a)

Once the second board is in place you are ready to fully secure the first line of T-Clips in place.

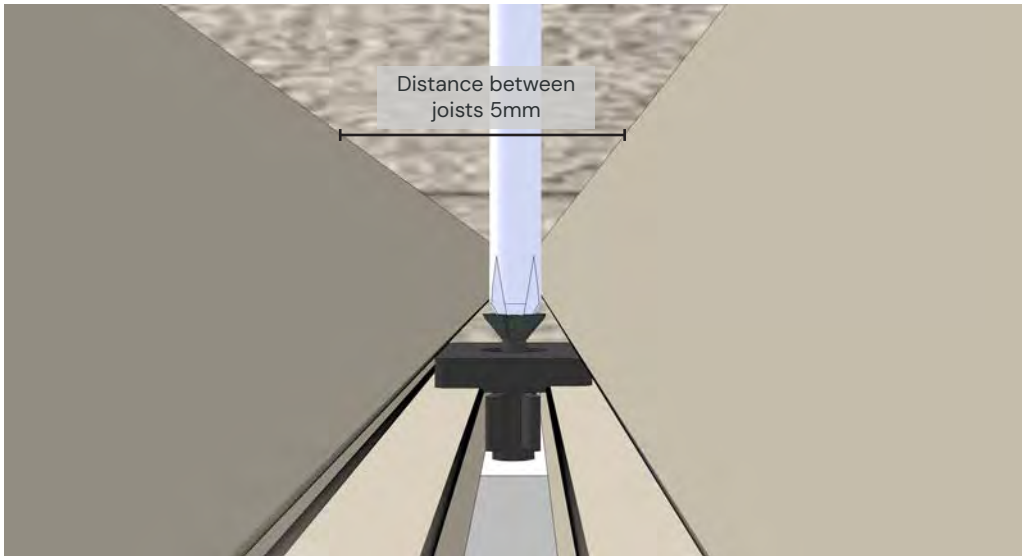

b)

When installing the T-Clips take care to use a screw bit of a suitable width to avoid damage to the boards.

Please note: Ecoscape supply the T-Clips with a dedicated screw drill bit. If you are using a drill to install the boards, please ensure you use this. Also take care to ensure the drill chuck does not come in contact with the boards as this may cause damage.

Please note: Deck board design will vary between ranges.

INSTALLATION

STEP 8

Install the remaining boards

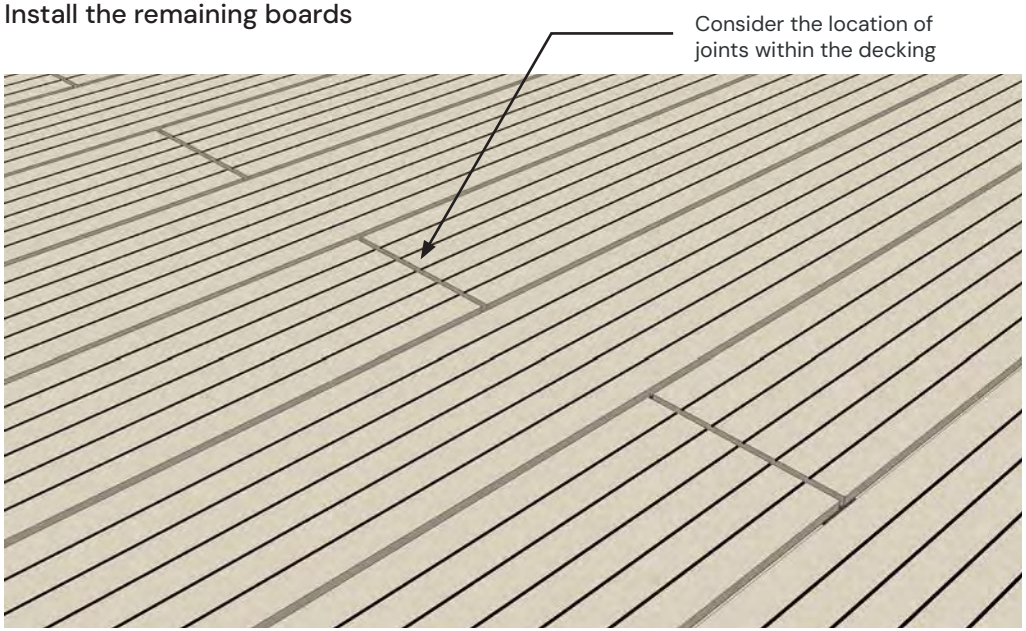

a)

Repeat steps 4 to 7 and install the remaining area of decking. If the decked area requires end joints to boards, plan where you want the joints to be visible. Joints should be made over a double joist as shown in step 9.

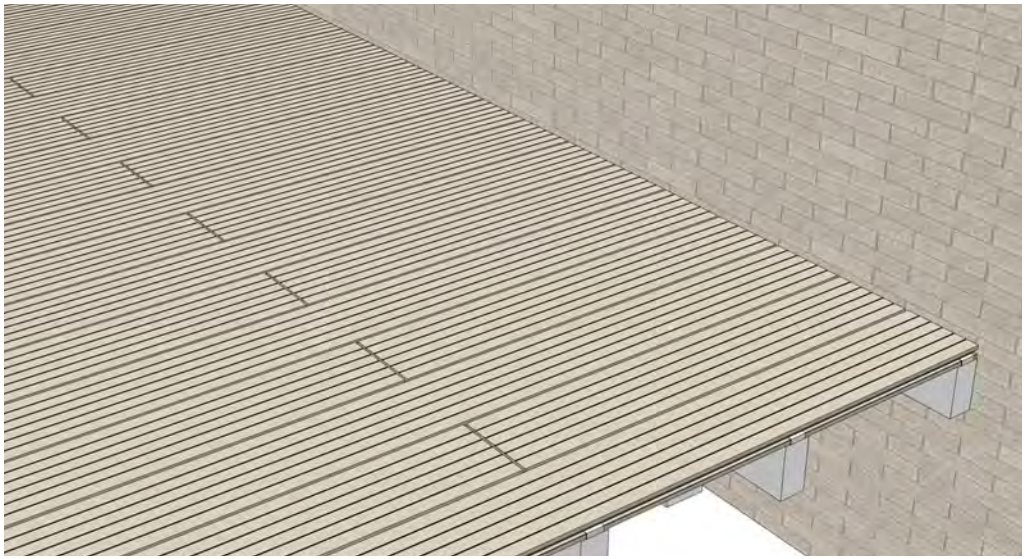

b)

Install the remaining boards.

Please note: Deck board design will vary between ranges.

INSTALLATION

STEP 9

Installing boards end to end

Where a decking board is to be laid end-to-end with another, a 2-3mm gap is required to the left between the boards (gap size depends on temperature at time of install - please refer to the Expansion Gap Table, p.38).

Please note: As a product that contains both wood and plastic, composite decking is subject to movement with temperature change. The movement is 1mm per 10° C in temperature change of the product, not air temperature. In direct sunlight, darker composites will reach higher temperatures than lighter colours.

Please take into consideration the boards temperature when laying. If particularly warm these may need tighter gaps during install.

The boards should be supported by sub-frame joists, positioned 20mm apart as shown on the adjacent image. This allows the ends of the decking boards to be supported, whilst also allowing water to drain freely between the ends of the boards and prevent standing water.

Please refer to the Expansion Gap Table on p.38 when installing the deck boards to determine the gap (mm) between boards and adjacent structures.

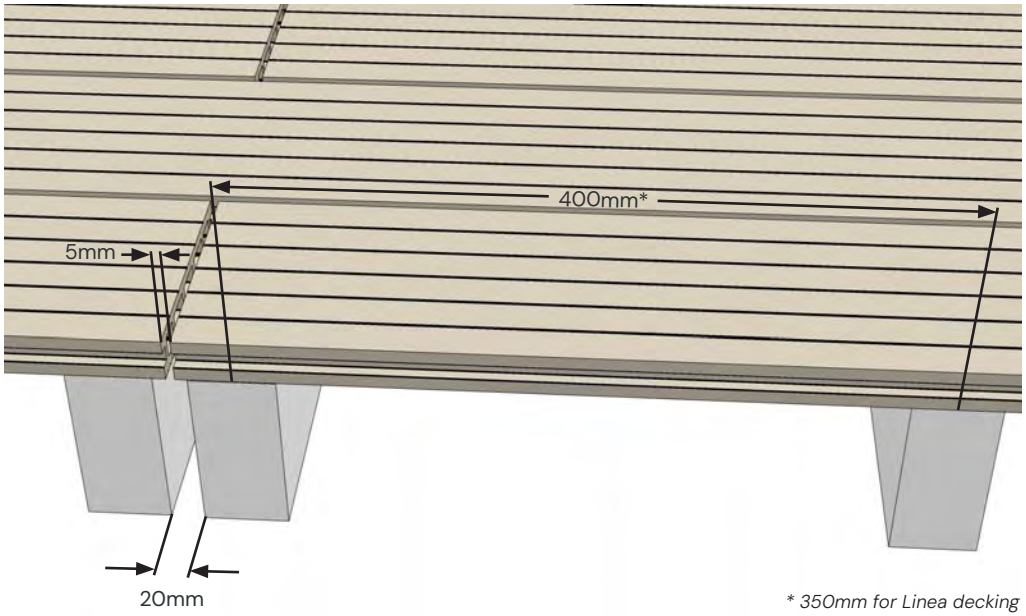

** 350mm for Linea decking*

Please note: Deck board design will vary between ranges.

INSTALLATION

STEP 10

Installing breaker boards

Sometimes you may want to install breaker boards. These can be very effective in breaking up the deck area.

These can be fitted either by;

— Cutting down Hidden T-Clips (refer to page 27) or;

— Using Starter Clips (refer to page 28)

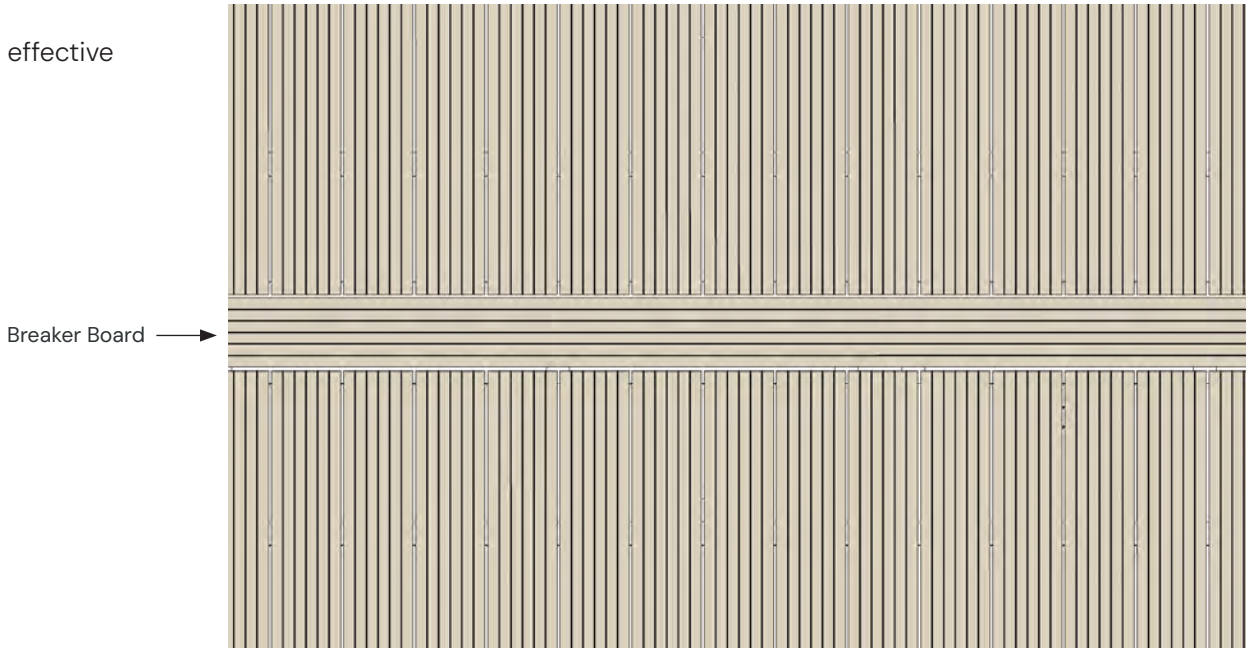

Please note: Deck board design will vary between ranges.

INSTALLATION

STEP 10

Installing breaker boards - using Hidden T-Clips

To install a breaker board using the T-Clips simply cut one side of the T-Clip off so the end of the adjoining board can sit tight.

Cutting the T-Clip:

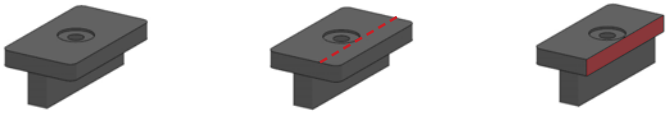

1. 2. 3.

Please note: Breaker boards should be fitted with a double joist support as illustrated in the adjacent images. This will ensure sufficient support to both the breaker board and the adjoining board end.

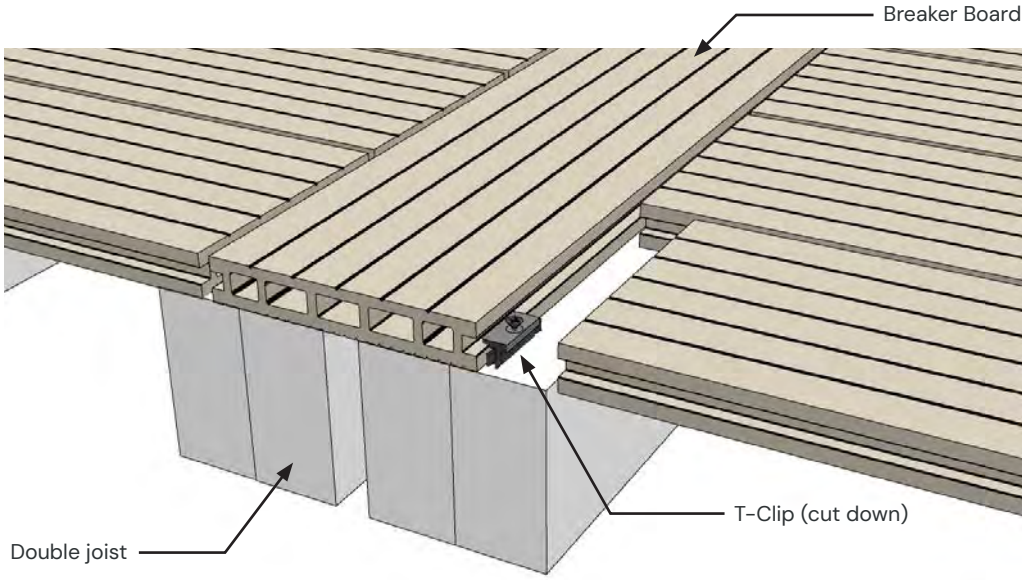

Plan view:

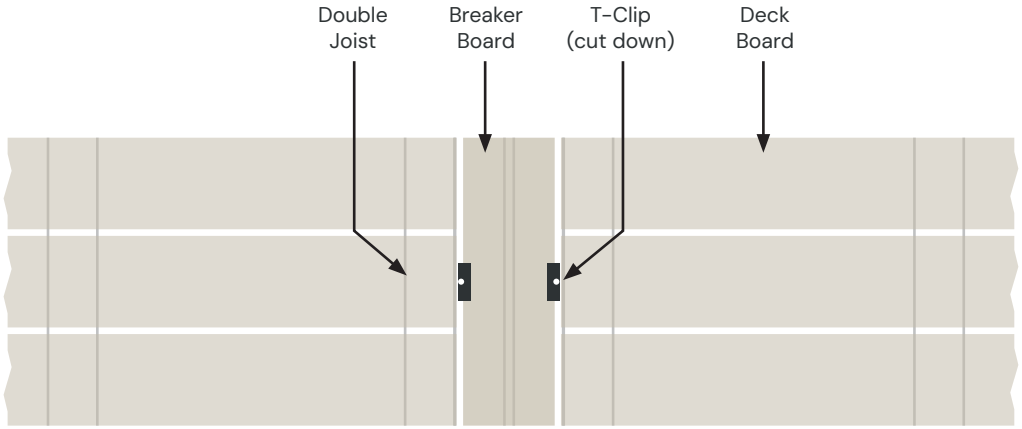

Please note: Deck board design will vary between ranges.

INSTALLATION

STEP 10

Installing breaker boards - using Starter Clips

To install a breaker board using the Starter Clips install the starter clips as per STEP 2 and STEP 3 on pages 18 and 19.

Please note: Breaker boards should be fitted with a double joist support as illustrated in the adjacent images. This will ensure sufficient support to both the breaker board and the adjoining board end.

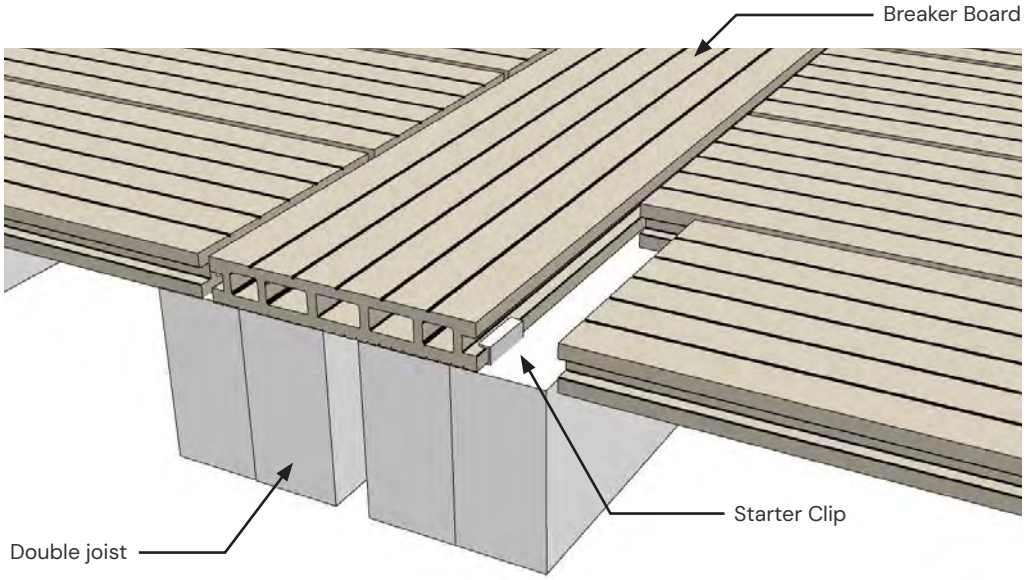

Plan View:

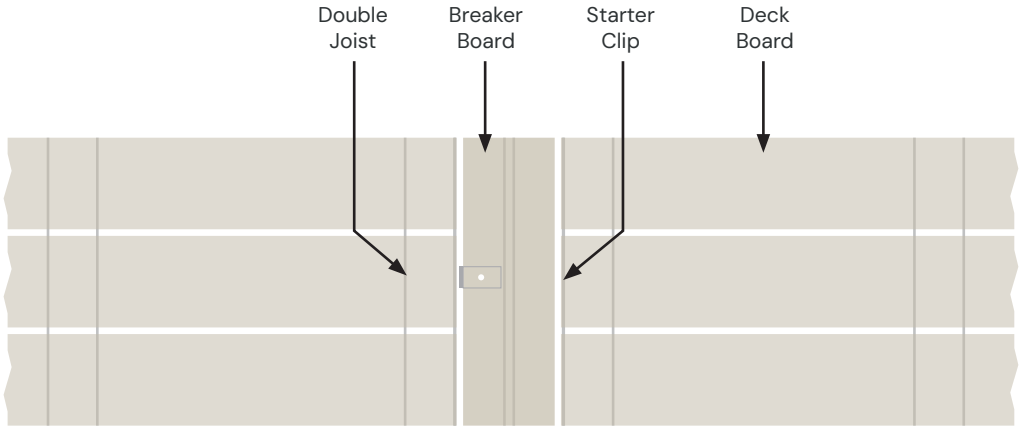

Please note: Deck board design will vary between ranges.

INSTALLATION - FINISHING THE DECK

STEP 11

Option 1 - Flat Fascia Trim

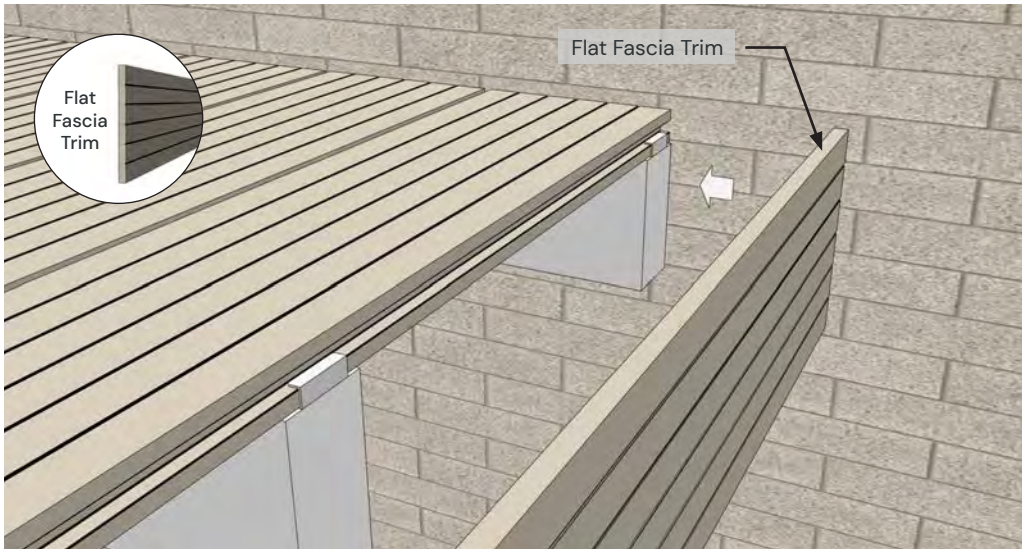

a)

Once the main boards have been installed the Flat Fascia Trim can be attached to create a clean edge.

Align the first trim with the top edge of the decking and fix into the joists using Ecoscape's Colour Coded Screws. 2 screws per joist (every 400mm*).

** 350mm for Linea decking*

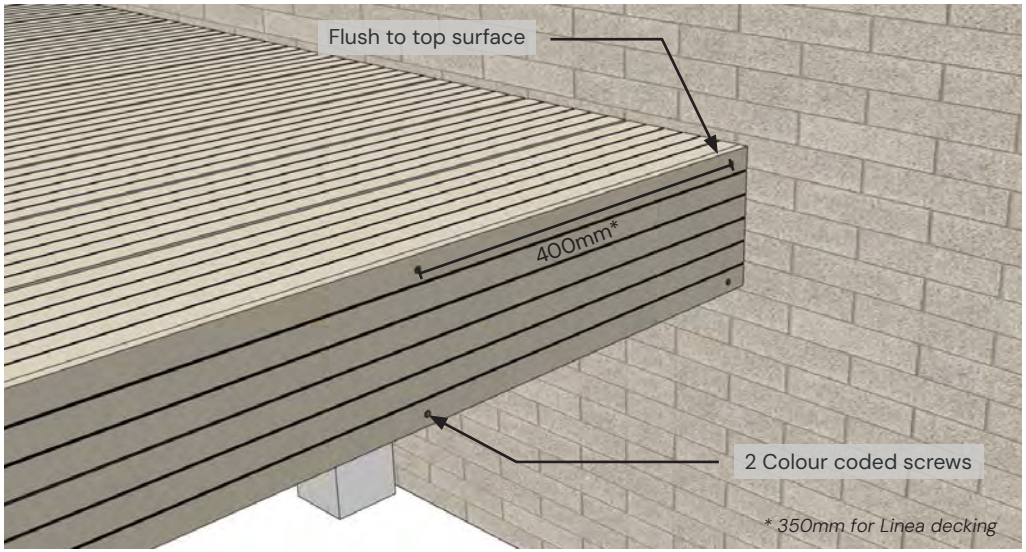

b)

Screws should be pre-drilled and counter sunk for the perfect finish and to stop cracking.

Please note: Deck board and trim design will vary between ranges.

INSTALLATION - FINISHING THE DECK

STEP 11

Option 1 - Flat Fascia Trim

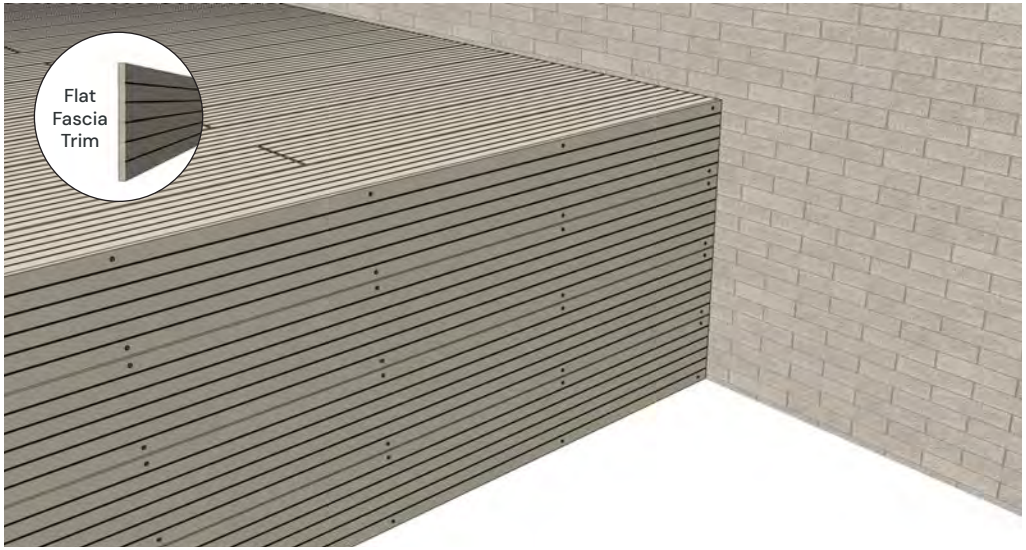

c)

Use the Flat Fascia Trim to finish the sides of the decking as required.

Please note: Deck board and trim design will vary between ranges.

INSTALLATION - FINISHING THE DECK

STEP 11

Option 2 - Angle Trim

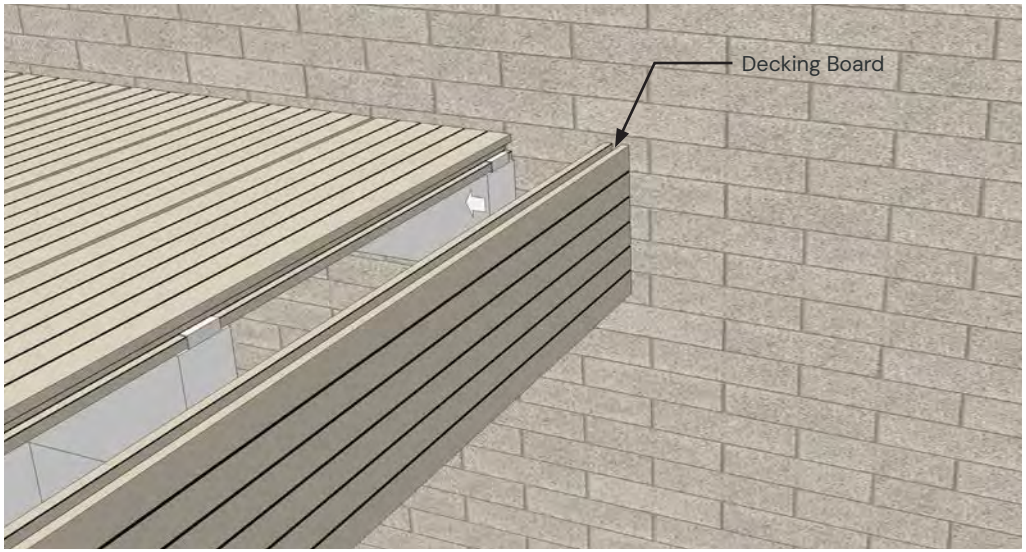

a)

An alternative method to finishing the decking is to utilise additional decking boards to clad the face of the decked area. The boards should be installed in a similar manner to the decking, however countersunk screws can be used rather than Hidden T-Clip fixings if the face of the decking isn't going to be in view

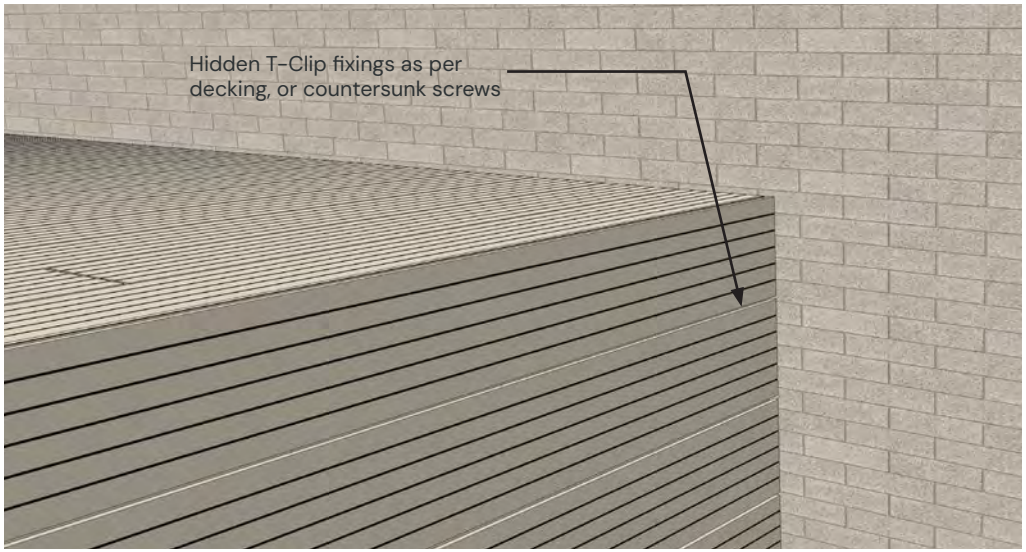

b)

Continued on next page.

Please note: Deck board and trim design will vary between ranges.

INSTALLATION - FINISHING THE DECK

STEP 11

Option 2 - Angle Trim

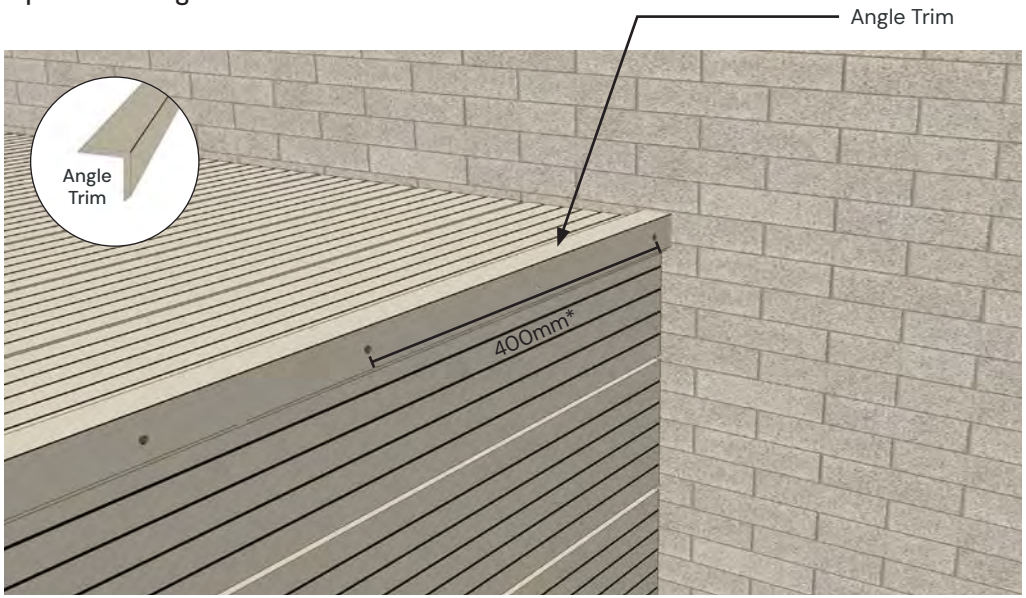

c)

Once the decking boards have been installed to the face, the Angle Trim accessory can be pinned to the top edge of the decking using Ecoscape's Colour Coded Screws, creating a smooth join.

1 screw per joist (every 400mm*). Screws should be pre drilled and counter sunk for the perfect finish and to stop cracking.

** 350mm for Linea decking*

Please note: Deck board design will vary between ranges.

INSTALLATION - FINISHING THE DECK

STEP 11

Option 3 - Solid Edge Board (Flush/Overhang)

A third method to finish the decking is using Solid Edge Board - this method achieves a seamless finish with no fixings on show.

You can install this flush with the front of the finishing board, or with a small over hang to the top edge. This is particularly effective when using the solid edge board on steps.

Please note: When installing Solid Edge Boards it is best to begin the decking process with the finishing boards to achieve a flush finish.

CLARITY DECKING

(For other ranges, see overleaf)

1. Fix the Starter Clips into the substructure frame. Note that this will determine how much the board over hangs the edge of the deck. Align the Solid Edge Board and push down over the starter clip.
2. Push the Solid Edge Board forwards so it slides into the Starter Clip.
3. Fix the adjoining decking boards to the deck and fascia using the T-Clips, Starter Clips and Locking Clips as required.

Continue with the rest of the decking.



Clarity Solid Edge Board

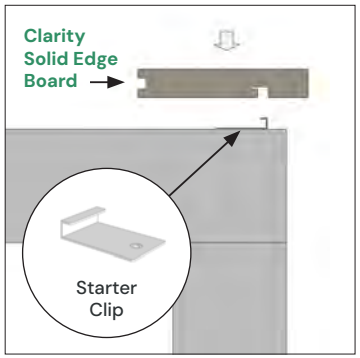

1. Fix the Starter Clips and push the board down



2. Push the board forwards



3. Fit adjoining decking boards

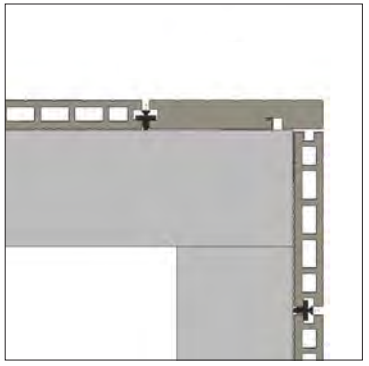

Completed - flush installation

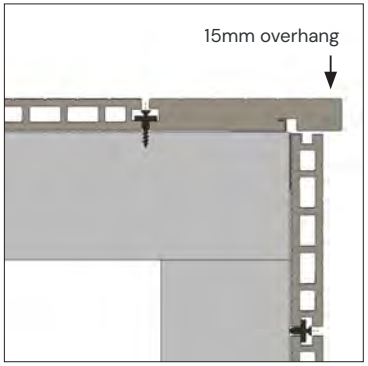

Completed - overhang installation

INSTALLATION - FINISHING THE DECK

STEP 11

Option 3 - Solid Edge Board (Flush/Overhang) with Hidden Screws and Composite Plugs

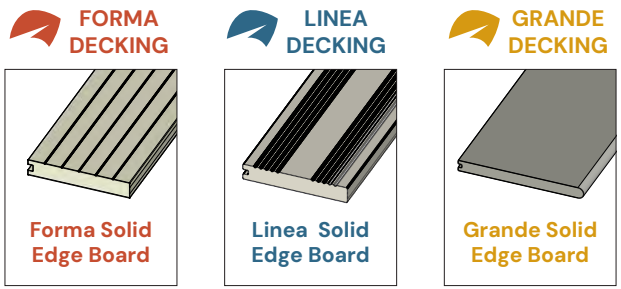

1. Pre-drill the Solid Edge Board, approx. 30mm in from the edge along the back of the board, and 20mm + fascia thickness + any desired overhang on the front edge of the board, using a 7/32" bit. (Ensure pre-drill is through the board only - NOT the joist).
2. Align the edge of the Solid Edge Board with the front of the finishing boards for flush installation, or use a small overhang. Use the Setting Bit to drive the Hidden Screws through the board to and attach it to the substructure. The setting bit provided will ensure the hidden screws are inserted to the correct depth.
3. Align the collated composite plugs with the grain of the board and use a mallet to knock the plugs into the holes to cover the hidden screws. Fix the adjoining decking boards to the deck and fascia using the T-Clips and Locking Clips as required.

Continue with the rest of the decking.

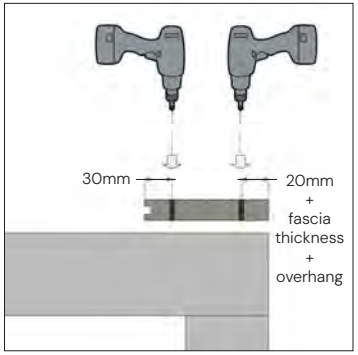

1. Pre-drill the Solid Edge Board

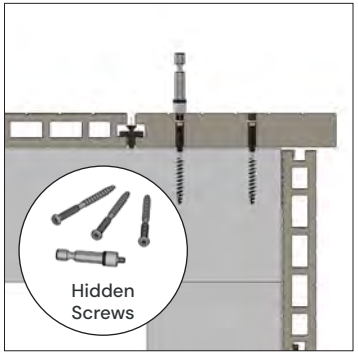

2. Set the Hidden Screws with Setting Bit



3. Use mallet to knock in Composite Plugs



Completed

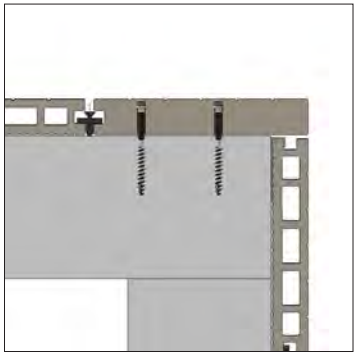

Completed - flush installation

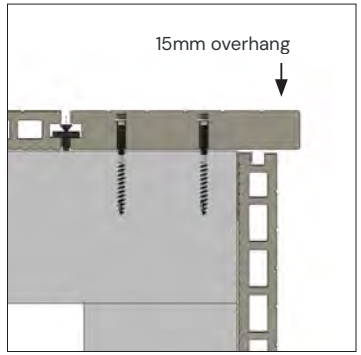

Completed - overhang installation

INSTALLATION - FINISHING THE DECK

STEP 11

Option 3 - Solid Edge Board (Flush/Overhang) with Colour Coded Screws

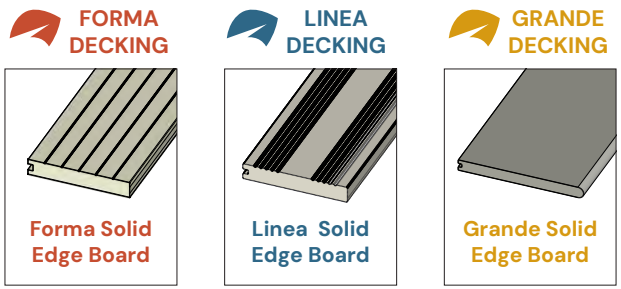

1. Pre-drill the Solid Edge Boards approx. 30mm in from the edge along the back of the board, and 20mm + fascia thickness + any desired overhang on the front edge of the board, and counter sink the holes.
2. Align the edge of the Solid Edge Board with the front of the Fascia Boards for flush installation, or use a small overhang. Drive the Colour Coded Screws through the board to attach to substructure. Fix the adjoining decking boards to the deck and fascia using the T-Clips, Starter Clips and Locking Clips as required.

Continue with the rest of the decking.

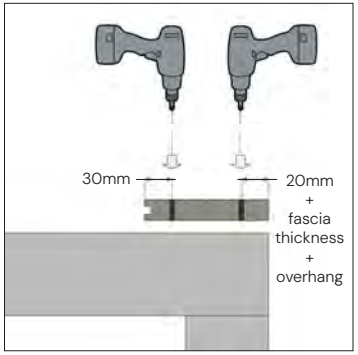

1. Pre-drill the Solid Edge Board and counter sink the holes.

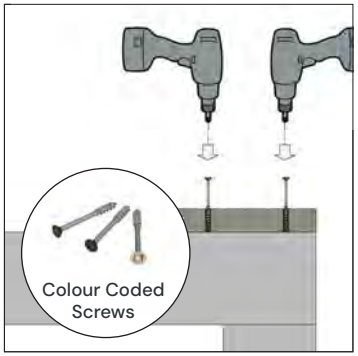

2. Drive screws



Completed

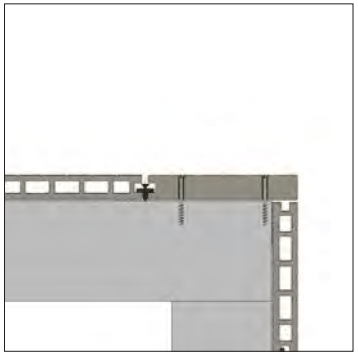

Completed - Flush installation

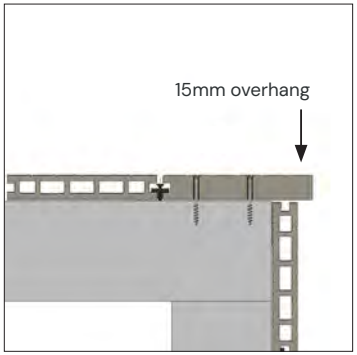

Completed - Overhang installation

INSTALLATION – FINISHING THE DECK

STEP 12

Install remaining boards

Once all the boards are installed the jointing should be seamless.



END

Job done!

Please consult with the technical department for further advice.

CLEANING & CARE

Ecoscape decking boards will require periodic maintenance to remove the build up of dirt and debris. We recommend the decking is cleaned once or twice a year using either:

— A high pressure cleaner (jet wash) with a fan shaped beam at a distance of at least 20cm in a lengthwise direction, or;

— Scrubbing brush with an all-purpose cleaner and water

Superficial burn marks, from BBQs or similar can also be removed using a coarse piece of sandpaper (80 grit or similar), by rubbing the deck length-ways gently.

EXPANSION GAP TABLE

Please refer to the table opposite when installing the deck boards to determine the gap (mm) between boards and adjacent structures.

Please note this table covers expansion and contraction values for UK and Europe.

Length (metres)

Installation Temperature (°C)	1	2.4	2.8	3	3.6	3.9	4	4.8	5.4	Gap (mm)
-10	2.4	5.9	6.7	7.2	8.8	9.4	9.6	11.7	13.0	
-5	2.2	5.4	6.2	6.6	8.1	8.6	8.8	10.7	11.9	
0	2.0	4.9	5.6	6.0	7.3	7.8	8.0	9.8	10.8	
5	1.8	4.4	5.0	5.4	6.6	7.0	7.2	8.8	9.7	
10	1.6	3.9	4.5	4.8	5.9	6.2	6.4	7.8	8.6	
15	1.4	3.4	3.9	4.2	5.1	5.5	5.6	6.8	7.6	
20	1.2	2.9	3.4	3.6	4.4	4.7	4.8	5.9	6.5	
25	1.0	2.4	2.8	3.0	3.7	3.9	4.0	4.9	5.4	
30	0.8	2.0	2.2	2.4	2.9	3.1	3.2	3.9	4.3	
35	0.6	1.5	1.7	1.8	2.2	2.3	2.4	2.9	3.2	
40	0.4	1.0	1.1	1.2	1.5	1.6	1.6	2.0	2.2	

REMOVING A BOARD

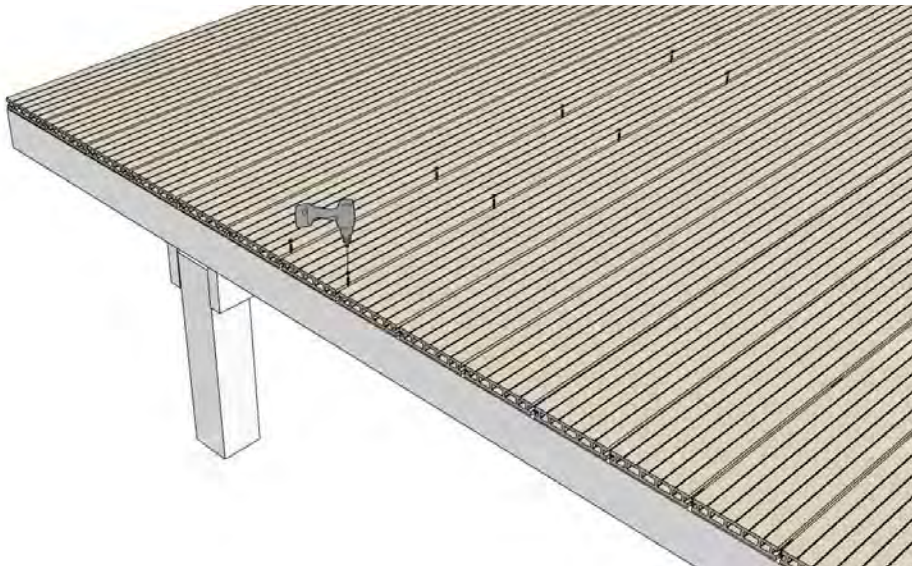

a)

Start by unscrewing all the T-Clips that attach the decking board on both sides.

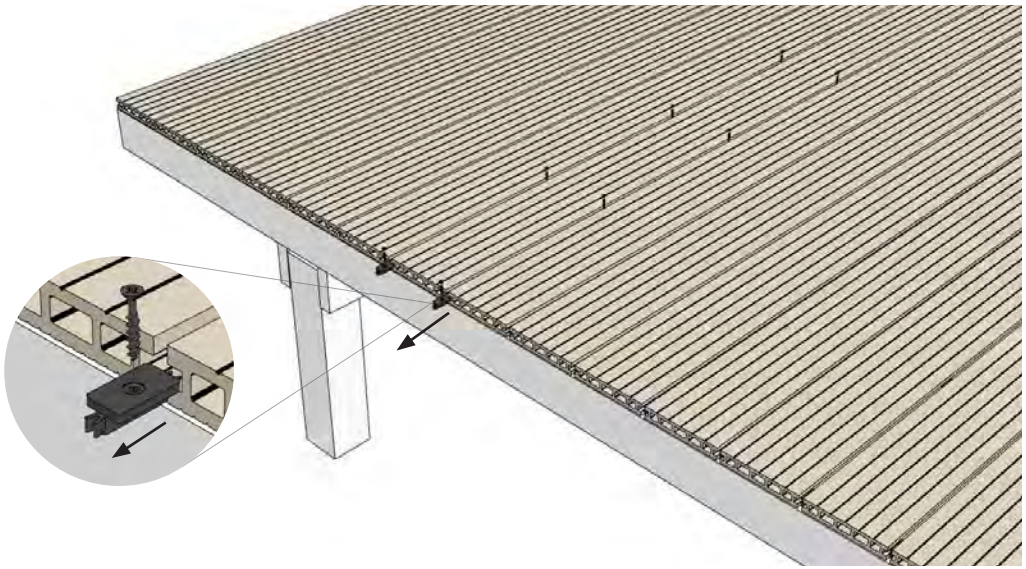

b)

Then slide all the T-Clips out of the decking board.

Please note: Deck board design will vary between ranges.

REMOVING A BOARD

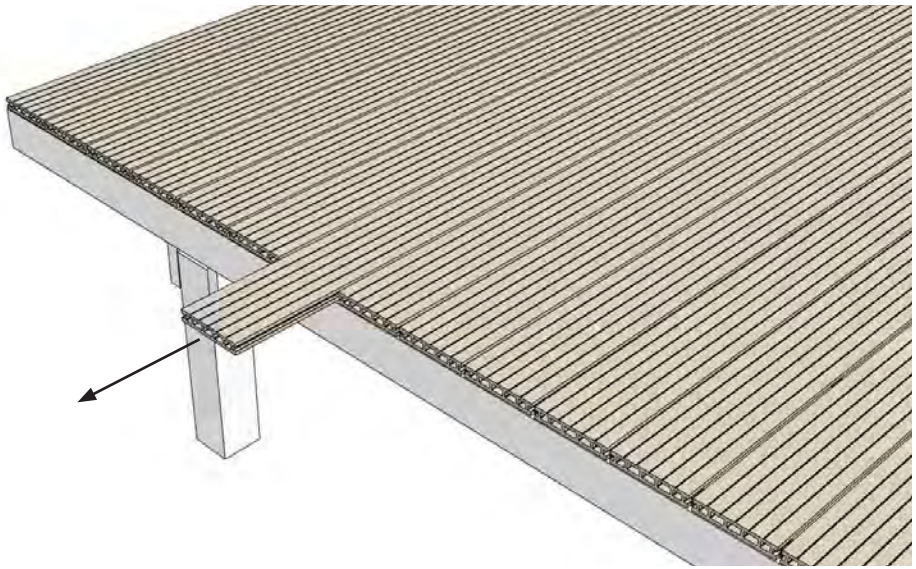

c)

Slide out the decking board.

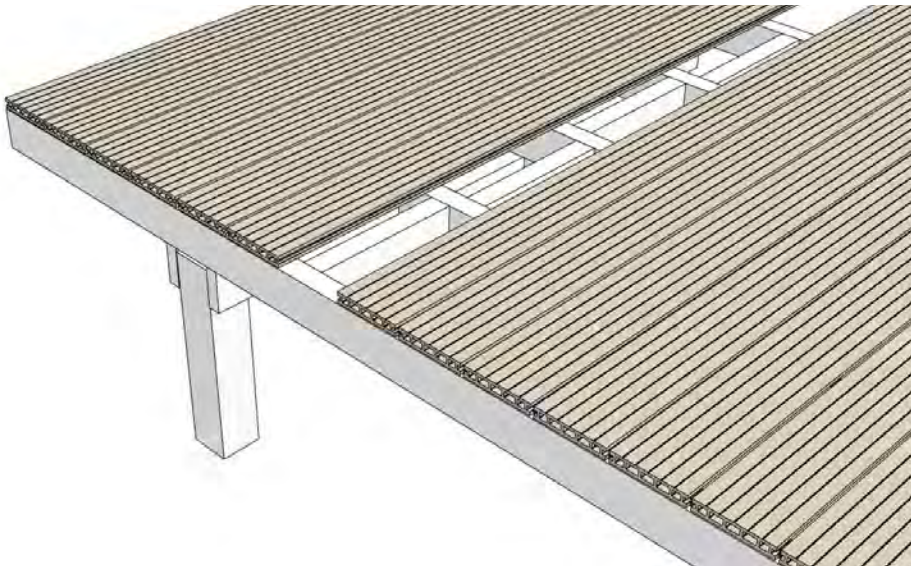

d)

The new decking board can now be inserted. Take the opportunity to check the sub frame for any damage/wear.

Please note: Deck board design will vary between ranges.

REMOVING A BOARD

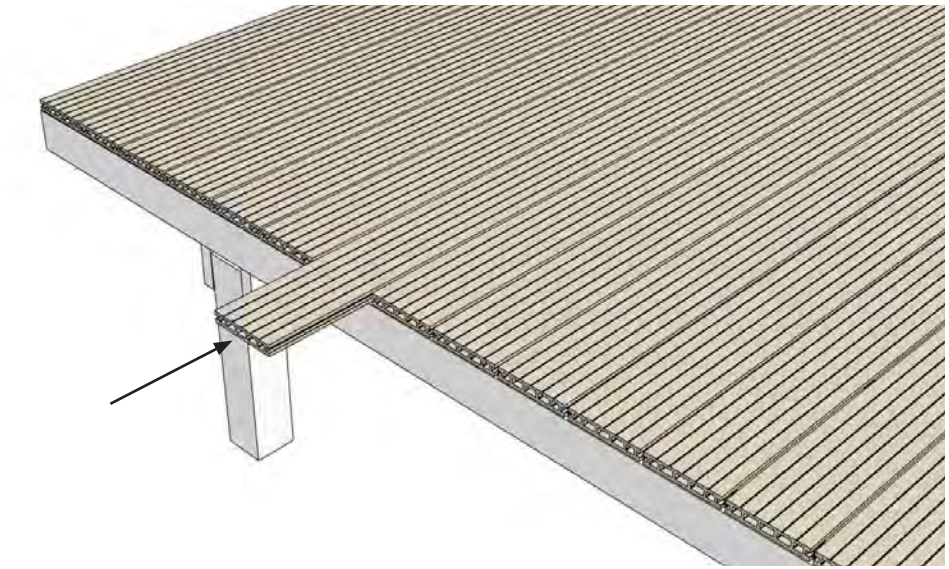

e)

Slide the new board into position.

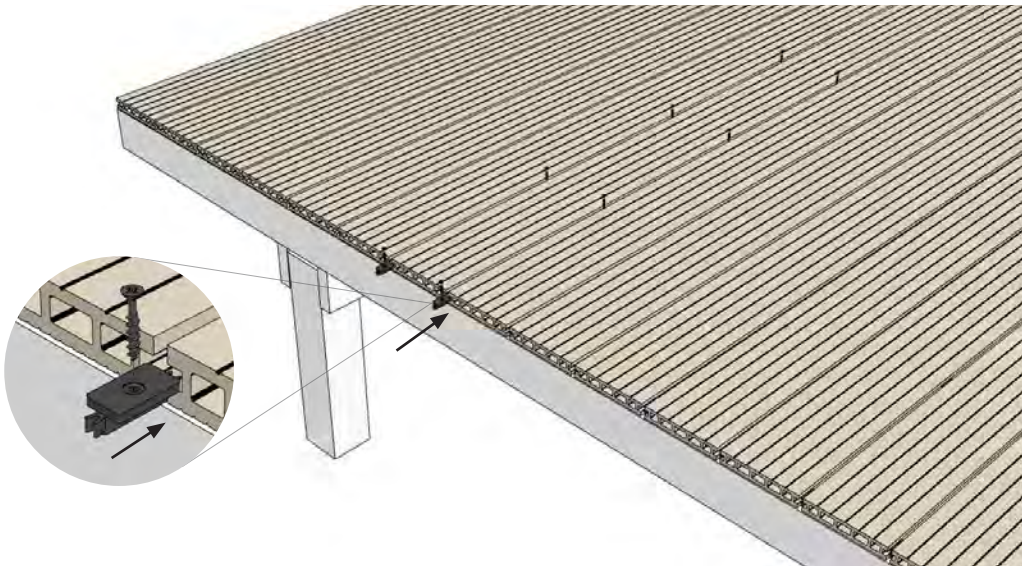

f)

Then slide all the T-Clips back into the grooves of the board, and back into their original positions.

Please note: Deck board design will vary between ranges.

REMOVING A BOARD

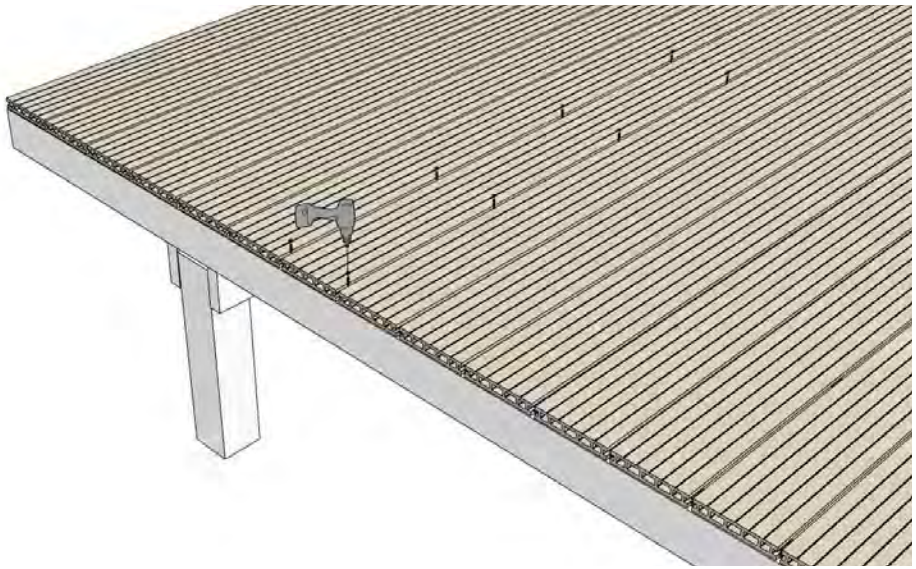

g)

The clips can then be re-secured.

Please note: Deck board design will vary between ranges.

ecoscape®

Higher Broadfield Farm,
Off Pilsworth Road,
Greater Manchester, OL10 2TA

www.ecoscape.co.uk
01706 364 637
sales@ecoscape.co.uk