ecoscape®

www.ecoscape.co.uk
01706 364 637
sales@ecoscape.co.uk

FORMA® COMPOSITE DECKING

November 2026

Specification Guide



Forma Composite Decking

Forma boards are made from 95% recycled material: 55% reclaimed wood fibre and 45% recycled plastic. Advanced co-extrusion gives each board a durable outer layer, with a woodgrain on one side and a wide groove on the reverse.

The process blends the board colours individually, so no two boards are quite the same and the finish recalls the natural variation of timber.

Available in 7 colours, with matching trims.

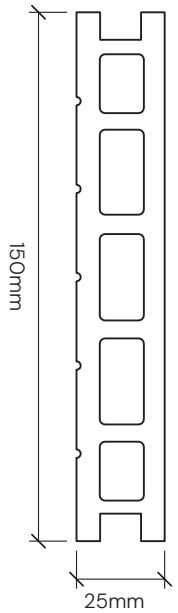

PRODUCT CODES



Length	Midnight	Argent	Flint	Silver Birch	Spiced Oak	Havana	Natural Oak
3.0m	ECO16MD30	ECO16AR30	ECO16FL30	ECO16SB30	ECO16SO30	ECO16HA30	ECO16NO30
4.8m	ECO16MD48	ECO16AR48	ECO16FL48	ECO16SB48	ECO16SO48	ECO16HA48	ECO16NO48

DETAILS

LENGTH	3000mm / 4800mm
WIDTH	150mm
THICKNESS	25mm
WEIGHT	2.97kg p/lm
MATERIAL	Wood plastic composite
FINISHES	6mm (1/4in) groove on one side, woodgrain on the other.
WARRANTY	25 years



Forma Decking Benefits

Made from 55% wood fibres and 45% HDPE, Forma decking is a durable alternative to traditional timber, with no need for painting or sealing. Its hard-wearing composite construction resists rot, splintering, scratches and stains, while retaining its colour over time.

- 25 YEAR WARRANTY
- LOW MAINTENANCE
- SLIP RESISTANT
- FAST, EASY INSTALL
- UV STABLE
- HIDDEN FIXINGS





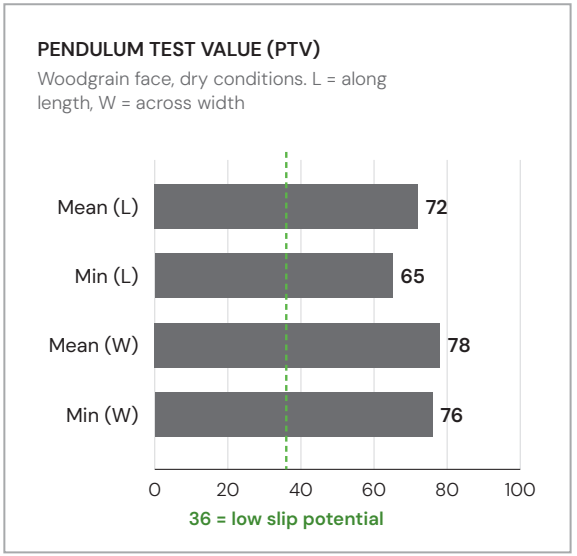

Sustainable Choice

Ecoscape wood plastic composite (WPC) is made from recycled HDPE plastic and reclaimed wood fibre from sustainable timber manufacturing.

Each year, our products incorporate an average of 4,401 tonnes of recycled HDPE plastic, diverting waste from landfill and giving it a new life as durable external building products.

Choosing Ecoscape helps make better use of reclaimed materials while creating durable products for a more sustainable future.

Pendulum Test Value

The slip test results show that the woodgrain face of Forma Composite Decking exceeds the PTV of 36 required to be classified as low slip potential, when tested in dry conditions across the width (W) and along the length (L) of the board.

Working Specification - Decking Systems

The drawings below show a typical substructure detail for Ecoscape composite decking, shown with Ecoscape Plastic Joist Substructure. Forma decking boards must be supported by joists placed at 400mm centres.

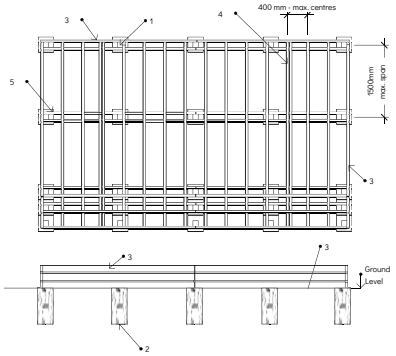

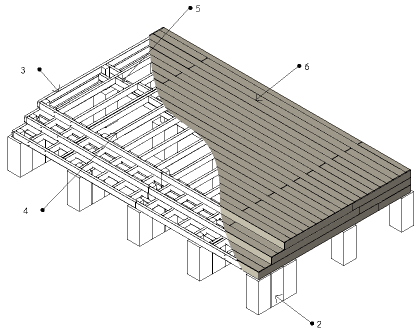



ECO05CT: Hidden T-Clip



ECO05LC: Locking Clip



ECO05SF: Start / Finish Clip

1: 100 x 100mm Ecoscape Plastic Decking Post (ECOPL100100)

2: Concrete Post Foundation

3: Framing Joist - 125 x 50mm Ecoscape Plastic Decking Joist (ECOPL12550)

4: Joist - 125 x 50mm Ecoscape Plastic Decking Joist (ECOPL12550)

5: Noggin - at 1500mm max. centres along joist

6: Forma Decking Boards

Forma decking boards should always be used with Ecoscape's clip system to allow for thermal expansion, with our Locking Clip used to keep boards held in place for years to come.

For further information, please see Ecoscape's Composite Decking Installation Guide on www.ecoscape.co.uk

Property	Test Method	Test Result	Test Requirements	Verdict
Appearance	EN 15534-1:2014 Section 6.1 EN 15534-4:2014 Section 4.3	Test specimens ware no crack, no blister and other visible defects.		
Sliperiness (Pendulum Test)	EN 15534-1:2014 Section 6.4.2 CEN/TS 15676:2007 EN 15534-4:2014 Section 4.4	Longitudinal Direction: Mean: 72 Min.: 65 Horizontal Direction: Mean: 78 Min: 76	Pendulum value≥36	Pass
Linear Mass	EN 15534-1:2014 Section 6.5 EN 15534-4:2014 Section 4.4	Mean.: 2850 g/m Max.: 2855 g/m Min.: 2846 g/m	Individual values≥95% declared value by the manufacturer.	N/A
Dimensions	EN 15534-1:2014 Section 6.6 EN 15534-4:2014 Section 4.4	Mean Thickness: 25.17 mm Mean Width: 150.37 mm Mean Length: 1001mm Max. Deviation flatwise straigtness: 0.10 mm Max. Deviation edgwise straightness: 0.06 mm Max. Cupping: 1.65 mm		
Falling mass impact resistance	EN 15534-1:2014 Annex A EN 15534-4:2014 Section 4.5.1	Type Hollow profile Max. Crack length (mm): No crack Max. Residual Indentation (mm): 0.11	None of 10 test specimens shall show a failure with a crack length ≥ 10 mm or a depth of residual indentation ≥ 0,5 mm.	Pass
Flexural properties	EN 15534-1:2014 Annex A EN 15534-4:2014 Section 4.5.2	Bending Strength: 21.0 MPa Modulus of Elasticity: 2902 MPa Maximum Load: Mean: 3328 N Min.: 3244 N Deflection at 500 N: Mean: 1.34 mm Max. 1.52 mm	Flexural properties -F'max: Mean ≥ 3300 N Min. ≥ 3000 N -Deflection under a load of 500 N Mean ≤ 2,0 mm Max.≤ 2,5 mm	Pass
Creep behaviour	EN 15534-1:2014 Section 7.4.1 EN 15534-4:2014 Section 4.5.3	Span: 400 mm Mean ΔS: 2.97 mm Max. ΔS: 3.03 mm Mean ΔSr: 1.81 mm	Known span in use Mean ΔS ≤ 10 mm Max. ΔS ≤ 13 mm Mean ΔSr ≤ 5 mm	Pass
Resistance to artificial weathering	EN 15534-1:2014 Section 8.1 EN 15534-4:2014 Section 4.5.5 ISO 4892-2: 2013, cycle 1	After 2000h exposure: ΔL* = 5.59, Δa* = -0.82, Δb* = -0.67 ΔE* = 5.70 Grey scale = 2-3	ΔL*, Δa* and Δb* shall be declared	N/A
Swelling and water absorption (28 days immersion)	EN 15534-1:2014 Section 8.3.1 EN 15534-4:2014 Section 4.5.5	Mean Swelling: 0.78% in thickness ; 0.35% in width; 0.27% length Max. Swelling: 0.97% in thickness; 0.45% in width; 0.29% in length Water Absorption Mean: 3.25% Max.: 3.38%	Mean Swelling: ≤4% in thickness ; ≤0.8% in width; ≤0.4% length Max. Swelling: ≤5% in thickness; ≤1.2% in width; ≤0.4% in length Water Absorption Mean: ≤7% Max.: ≤9%	Pass

Property	Test Method	Test Result	Test Requirements	Verdict
Moisture resistance under cyclic test conditions	EN 15534-1:2014 Section 8.3.2 EN 15534-4:2014 Section 4.5.5	Original MOR: 21.0 MPa After exposure, Mean MOR: 19.8MPa Decrease: 5.7 % Min MOR: 19.3 MPa Decrease: 8.1 %	Decrease of bending strength, Mean ≤ 20 % Max. ≤ 30 %	Pass
Boiling Test	EN 15534-1:2014 Section 8.3.3 EN 15534-4:2014 Section 4.5.5	Water absorption in weight: Mean: 1.56 % Max.: 1.86 %	Water Absorption in weight: Mean ≤ 7 % Max. ≤ 9 %	Pass
Linear thermal expansion coefficient	EN 15534-1:2014 Section 9.2 EN 15534-4:2014 Section 4.5.6 ISO 11359-2:1999	Mean: Longitudinal direction: 46.0 ×10-6 K-1	≤ 50×10-6 K-1	N/A
Heat Reversion	EN 15534-1:2014 Section 9.3 EN 15534-4:2014 Section 4.5.7 EN 479:2018	Test Temperature: 100°C Mean: 0.06 %		
Heat build-up	EN 15534-1:2014 Section 9.4 EN 15534-4:2014 Section 4.5.7	Set temperature rise for use in horizontal position: 50 °C Actual temperature rise for black control specimen: 50.0 °C Temperature of test specimen: 46.8 °C Predicted heat build-up ΔT: -3.2-3°C	Indenter: a hardened steel spherical body with diameter of 10 mm Test load: Additional load of 2000N with preload of 20N Indentation time: (25 ± 5) s Recovery time: at least 24h	
Resistance to indentation	EN 15534-1:2014 Section 7.5 EN 15534-4:2014 Section 4.5.7	Brinell hardness: 69 MPa Rate of elastic recovery: 53 %		
Neutral salt spray test	EN 15534-1:2014 Section 8.6 ISO 9227:2017 EN 15534-4:2014 Section 4.5.7	After 300h exposure: ΔL* = -0.49, Δa* = 0.29, Δb* = .56 ΔE* = 0.93 Grey scale = 4-5	Known span in use Mean ΔS ≤ 10 mm Max. ΔS ≤ 13 mm Mean ΔSr ≤ 5 mm	Pass
Fire Resistance	EN 13501-1:2018	Standard Option Classification: C_{fl}-S 1		For more information, please contact Ecoscape specifications team

Disclaimer

At Ecoscape, we take care to ensure the information in this document is accurate at the time of publication and provided in good faith to support your project.

To continuously improve our products, we reserve the right to update specifications, dimensions, colours, finishes, performance data and installation guidelines without prior notice. Visuals, including images, illustrations and drawings, are for guidance only. Nominal dimensions and weights are subject to standard manufacturing tolerances. Natural variations in colour, tone, grain pattern and surface texture are inherent characteristics of Forma Composite Decking and may vary between individual boards and production batches.

To the fullest extent permitted by law, Ecoscape UK Ltd accepts no liability for loss or damage arising from improper specification, storage, installation or maintenance. Always check that you have the latest version of this document before placing an order or commencing work.

ecoscape®

OUTDOOR ARCHITECTURAL MATERIALS

Higher Broadfield Farm,
Off Pilsworth Road,
Greater Manchester, OL10 2TA

www.ecoscape.co.uk
01706 364 637
sales@ecoscape.co.uk