ecoscape®

www.ecoscape.co.uk
01706 364 637
sales@ecoscape.co.uk

Forma® – Composite Panel Cladding

Sept 2026 V2

Installation Guide

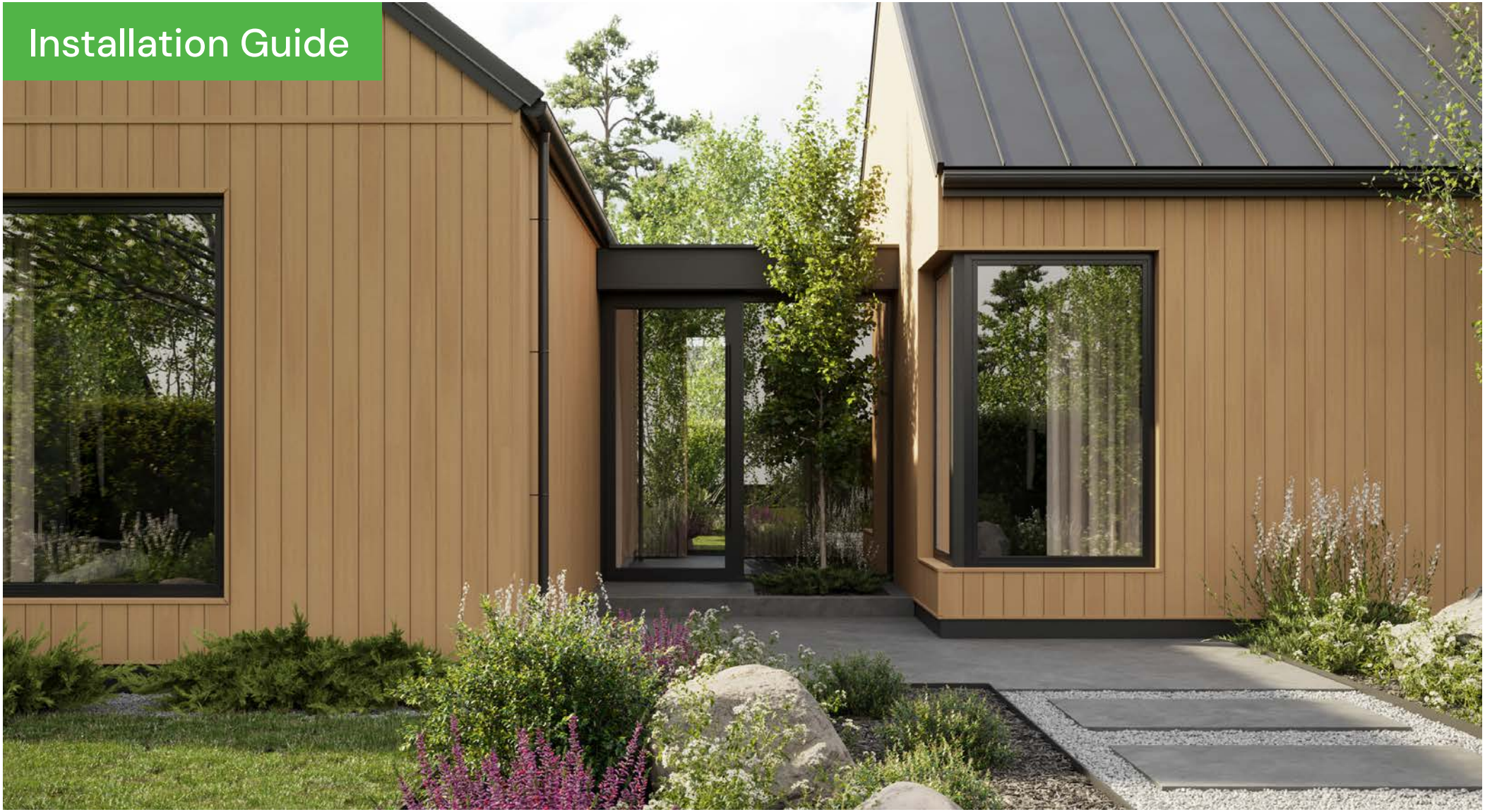

CONTENTS

Introduction Page 2
Colours & Orientation Page 3
Safety & Use Page 4
Applications Page 5
Storage & Handling / Tools Page 6
System Components Page 7
Calculating Materials Page 8
Pre-Installation Notes Page 9-10

Installation – Horizontal Cladding
- Step 1: Set Out the Elevation & Battens Page 11
- Step 2: Install the Vertical Trims Page 12
- Step 2A: Prepare Window & Door Openings Page 13
- Step 3: Install the Starter Bar Page 14
- Step 4: Install the First Cladding Board Page 15
- Step 5: Lock the Cladding Board Page 16
- Step 6: Continue the Cladding Page 16
- Step 7: Install the Top Cladding Board Page 17
- Step 8: Install the Finishing Board Page 18
- Step 9: Completion Checks Page 19

Installation – Vertical Cladding
- Step 1: Set Out the Elevation & Battens Page 20
- Step 2: Install the Trims Page 21
- Step 2A: Prepare Window & Door Openings Page 22
- Step 3: Install the Panel Cladding Boards Page 23
- Step 4: Lock the Cladding Board Page 23
- Step 5: Continue the Cladding Page 24
- Step 6: Install the Last Cladding Board Page 24
- Step 7: Completion Checks Page 25

Cleaning & Care Page 26
Thermal Movement Table Page 27

INTRODUCTION

This guide provides installation guidance for Forma Composite Panel Cladding and is intended for professional installers, contractors and competent DIYers with joinery experience. Installers must follow all relevant building regulations and project-specific design requirements. Read these instructions fully before starting installation.

Forma Composite Panel Cladding is a durable, low-maintenance exterior cladding system combining the appearance of timber with the long-term performance of composite. Its 95% recycled wood-plastic core is protected by a UV-stable co-extruded capping, providing excellent resistance to weathering, rot and fading without ongoing painting, staining or sealing.

Suitable for both horizontal and vertical installation, Forma features a classic flat profile which, combined with its concealed fixing system, delivers a clean, seamless appearance across residential and commercial applications. Following these guidelines will help ensure correct ventilation, thermal movement and long-term performance.



COLOURS:

A versatile colour palette spans contemporary monochromatic greys and warm, natural browns, offering flexibility to complement a wide range of design styles and materials.



HAVANA



SPICED OAK



NATURAL OAK



SILVER BIRCH



FLINT



ARGENT



MIDNIGHT

ORIENTATION:

Designed for horizontal or vertical installation, Forma Panel Cladding offers flexibility to suit a range of architectural styles, from clean, contemporary vertical layouts to classic horizontal designs.



HORIZONTAL



VERTICAL

SAFETY & USE

Before installation, consult relevant building regulations and project requirements to determine any restrictions that may apply. The illustrations and instructions in this guide are for general guidance and do not replace advice from a suitably qualified professional. The installer is responsible for assessing each application and ensuring the product and installation method are suitable.

Safety

- Wear appropriate Personal Protective Equipment (PPE) during installation. When cutting or installing boards, this should include gloves, protective eyewear, suitable respiratory protection, long sleeves and trousers.
- Dry and windy conditions may result in naturally occurring static build-up in composite products.
- All cladding boards must be installed onto a suitable substructure. Maintain a minimum 25mm cavity behind the cladding to provide adequate ventilation, drainage and drying.
- Excessive heat from external sources, including reflected sunlight from Low-E glazing, may cause increased surface temperatures. Prolonged excessive heat can result in increased expansion and contraction, distortion, accelerated weathering or, in extreme cases, damage to the board surface.

Use

- Standard woodworking tools can be used to install Forma Panel Cladding.
- When using a mitre saw, use a suitable fine-tooth multipurpose aluminium/ laminate blade to achieve clean cuts.
- Plan the cladding layout before starting, paying particular attention to doors, windows, soffits and other interfaces.
- Forma Panel Cladding is non-structural and must not be used as columns, posts, beams or other load-bearing members.
- Boards must be fixed to a compliant substructure and must not be installed directly onto walls, studs, concrete, existing cladding or other flat surfaces.
- Install fixings at 90° to the fixing surface unless otherwise stated.
- Use white chalk, straight edges or string lines when setting out. Do not use coloured chalk, as this may permanently stain the boards.
- Ensure appropriate flashing and weather barriers are installed around openings, wall/roof junctions, chimneys and transitions between different façade materials.

For further guidance, contact the Ecoscape Technical Team.

APPLICATIONS

Forma Panel Cladding is a versatile façade solution suitable for a wide range of residential and commercial applications. Typical uses include external cladding for homes, commercial buildings and garden rooms, as well as feature walls, screening elements, garden walls and outdoor structures.

Forma Panel Cladding is designed primarily for single-sided visual applications. It is not intended for installations where both sides remain visible, such as freestanding fencing or dividing walls.

Where a double-sided finish is required, consider an alternative Ecoscape system designed for this application or construct a suitable load-bearing substructure and clad both sides.

This guide demonstrates the recommended methods for installing Forma Panel Cladding onto a building façade. For guidance on other applications, contact the Ecoscape Technical Team.

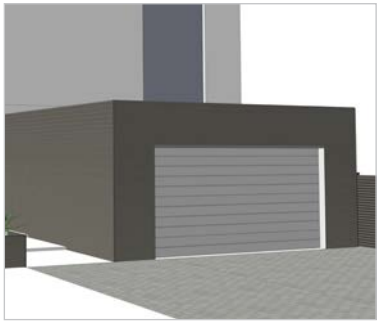

Façade System

Installed onto a battened substructure fixed to a block wall or similar.



Screening System

Installed onto a suitable structural frame to create a screen or planter.

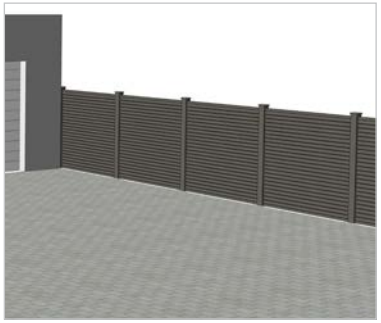

Fencing System

Forma Panel Cladding can be used for fencing; however, the Ecoscape Composite Fencing range may provide a more cost-effective solution.

www.ecoscape.co.uk | 01706 364 637 | sales@ecoscape.co.uk

STORAGE & HANDLING

Forma composite materials are highly durable; however, correct storage and handling are important to prevent damage before installation.

Storage & Handling

- Store materials under cover, away from prolonged direct sunlight, and keep clean and dry until required.
- Store boards:
  - flat and off the ground
  - fully supported at maximum 500mm centres
  - with supports vertically aligned through the stack
  - without objects stored on top
- Stack boards face-to-face and directly above each other.
- Do not lean boards, stand them on edge or store them at an angle.
- Leave packaging straps in place until materials are ready to be unpacked.
- Remove boards individually and in a controlled manner, maintaining stack stability.
- Carry boards on edge and support them adequately when moving.
- Do not stack delivered pallets higher than 3m.
- During installation, keep boards clean and free from construction debris.
- Do not drag tools, equipment or materials across the board surface, as this may cause scratching or scuffing.

Ecoscape UK accepts no responsibility for damage arising from incorrect storage or handling.

TOOLS

Recommended tools include:

- Circular saw with suitable fine-tooth aluminium/laminate blade
- Mitre saw
- Jigsaw
- Drill
- 3mm drill bit and countersink bit
- 5mm drill bit
- Tape measure
- Set square
- String line
- Laser level or spirit level
- Pencil
- Appropriate Personal Protective Equipment (PPE)

Always follow the tool manufacturer's operating instructions.

SYSTEM COMPONENTS:

In addition to Forma Panel Cladding boards, Ecoscape provides a range of trims, fixings and substructure components to achieve a professional finish. Ensure you are familiar with the required components before starting work.


F-Trim


Angle Trim


Internal Corner Trim


External Corner Trim


Panel Reveal Trim


Joint Trim


Finishing Board


Aluminium Starter Bar


Aluminium Cladding Clip


Plastic Pad


Wood Screw


Locking Screw

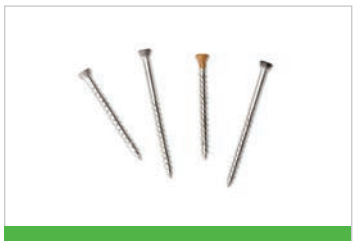
Colour-Coded Screws


Plastic Cladding Battens



Cladding & Decking Tape

www.ecoscape.co.uk | 01706 364 637 | sales@ecoscape.co.uk

CALCULATING MATERIALS

To accurately determine the material quantities for your project, we recommend following best practice by producing detailed elevations and generating a full material take-off schedule. However, for a quick calculation, the method below should provide a reliable approximation. This includes a standard 10% allowance for cutting and waste. Please note that complex layouts or projects with multiple openings may require a higher allowance.

For tailored advice, contact our experts directly at technical@ecoscape.co.uk.

Step 1. Measure the length of trims

The Forma Panel Cladding system includes External Corner Trims, Internal Corner Trims, Angle Trims, F-Trims, Reveal Trims and Joint Trims, starter bars. All trims are supplied in 3600mm lengths, so divide the total length required by 3.6m and always round up to the next complete trim.

Additional material may be required where joints are to be avoided or where the installation includes numerous cuts.

Example:

External Corner Trim
Total Length 50m ÷ 3.6m = 13.9 → 14 Trims

F-Trim
Total Length 9m ÷ 3.6m = 2.5 → 3 Trims

Reveal Trim
Total Length 5m ÷ 3.6m = 1.4 → 2 Trims

Starter Bars
Total Length 6m ÷ 3m = 2 → 2 Trims

Step 2. Measure the m² area for cladding

Forma Panel Cladding has an installed coverage width of 134mm. This means approximately 7.46 linear metres of cladding are required to cover 1m².

First calculate the total wall area in m² and multiply it by 7.46 to determine the linear metres of cladding required. Add the recommended 10% cutting and waste allowance, then divide by the 3.6m board length. Always round the final quantity up to the next complete board.

Example:

Wall area: 55m²

55m² × 7.46 = 410.3 linear metres

410.3m + 10% waste = 451.3 linear metres

451.3m ÷ 3.6m = 125.4 → 126 cladding boards

Example total:

- 126 Forma Panel Cladding Boards
- 14 External Corner Trims
- 3 F-Trims
- 2 Reveal Trims
- 2 Starter bars

Fixings and screws, available in packs of 250 (each covering approx. 17m²):

- 4 boxes of cladding clips
- 4 packs of wood screws for cladding clips

Locking screws, calculate based on: number and length of boards and the installation orientation.

- 126 Locking Screws 1 per board horizontal
- 252 Locking Screws 2 per board vertical (≥2.5m)
- 126 Locking Screws 1 per board vertical (<2.5m)

Note: Min bag quantity for fixing and clips will apply.

Installing boards vertically may lead to additional waste, depending on wall height. Please factor this into your considerations. Offcuts can always be used above/below windows and above doors.



PRE-INSTALLATION NOTES

STRUCTURAL INTEGRITY & WALL PREPARATION

- Forma Panel Cladding is a non-structural system and must not be relied upon to provide structural support.
- Before installation, ensure the wall or supporting structure is structurally sound and capable of supporting the additional cladding load.
- Where the wall is uneven or unsuitable for direct batten fixing, use a suitably designed independent supporting frame.
- Protect the wall with a suitable breathable membrane with a minimum water resistance classification of W1 to BS EN 13859-2.
- Fix battens securely using A4 stainless steel countersunk fixings suitable for the substrate. Fix each batten in a minimum of three positions.
- Install all battens flat, straight and true, without twisting or bowing.

Ecoscape shall not be liable for failures resulting from an inadequate wall, supporting structure or substructure.

BATTEN SPACING, VENTILATION & THERMAL MOVEMENT

- Install battens in accordance with the fixing and ventilation requirements in this guide.
- Allow for natural expansion and contraction of the composite boards, by leaving appropriate expansion gaps. Refer to the Thermal Movement Table on page 27 to work out expansion gaps.
- Maintain a minimum 15mm clearance between the cladding and finished ground or adjacent surfaces.
- Maintain a continuous minimum 25mm cavity behind the cladding.
- Maintain a minimum 20mm clear gap at batten ends where required to preserve ventilation and drainage paths.
- Install supporting battens at maximum 500mm centres.
- Provide additional battens around windows, doors, fascias, soffits, guttering, ventilation openings and corners.



www.ecoscape.co.uk | 01706 364 637 | sales@ecoscape.co.uk

PRE-INSTALLATION NOTES

DOUBLE BATTENS

- Two battens fixed side by side in the same plane with a 20mm clear gap, providing additional fixing support, improving installation tolerance and maintaining ventilation and drainage. Use double battens where specified, including:
  - Central locking locations for vertical boards 2.5m and longer
  - Joint Trim details
  - Other locations requiring additional fixing support:

CROSS-BATTENING / COUNTER-BATTENING

- A two-layer batten system, with the second layer fixed at 90° to the first. Used where required to provide fixing support while maintaining ventilation and drainage behind the cladding.
- Cross-battening may be required for some vertical installations due to the wall construction, project design or localised Building Control requirements.

ECOSCAPE PLASTIC BATTENS

- Ecoscape solid plastic battens provide a durable, low-maintenance substructure for installation onto a structurally sound wall. Covered by a 25-Year Warranty.
- Available sizes: 25mm × 50mm × 3000mm and 20mm × 100mm × 2800mm

TIMBER BATTENS

- Pressure-treated softwood battens suitable for external cladding applications may be used as an alternative and should be treated in accordance with BS 8417. Minimum dimensions:
  - Board support: 25mm × 38mm
  - External corner trims: 25mm × 50mm
  - Finishing Board batten: 19mm × 32mm
- Battens must be straight, dimensionally stable and suitable for secure fixing.
- Where timber battens are used, Ecoscape recommends applying Ecoscape Cladding & Decking Tape to help protect the substructure from moisture.



INSTALLATION - HORIZONTAL CLADDING

STEP 1: SET OUT THE ELEVATION & BATTENS

- Plan the board courses before fixing the battens. Allow for windows, doors and eaves, and avoid narrow rip cuts at the top or bottom of the elevation.
- The Starter Bar may be raised to improve the board layout, but maintain a minimum 15mm clearance above finished ground or adjacent surfaces.
- Set vertical battens at a maximum of 500mm centres.
- Provide additional battens around corners, windows, doors and other openings to support boards and trims.
- Standard board-support battens: minimum 25mm × 38mm.
- External corners/opening details: minimum 25mm × 50mm, where additional fixing width is required.
- For a Joint Trim, install two 25mm × 38mm battens with a 20mm clear gap between them.
- Allow for the horizontal Finishing Board batten or F-trims beneath the eaves:
  - Timber substructure: 19mm × 32mm treated timber
  - Ecoscape plastic substructure: 20mm-thick Ecoscape batten



www.ecoscape.co.uk | 01706 364 637 | sales@ecoscape.co.uk

INSTALLATION - HORIZONTAL CLADDING

STEP 2: INSTALL THE VERTICAL TRIMS

Horizontal cladding is installed in bays between two vertical trims.

1. Fix the first vertical trim to the supporting batten.
2. Pre-drill and countersink the trim, then fix through the rear flange using suitable wood screws at maximum 750mm centres, fixed at a minimum of 3 points.
3. Set the second trim to suit the board length.
4. As a typical UK setting, position the trims so the measured distance between their specified outer faces is:

   Board length -12mm

   - This typically provides approximately 6mm board engagement* at each end.

   Example:

   - 3600mm board → 3588mm trim spacing
   - Important: 6mm engagement* is a typical UK installation allowance, not a fixed requirement.
   - Where a Joint Trim is used, centre it between the two supporting battens, leaving sufficient fixing width for the Aluminium Cladding Clips on either side.

*Check the Thermal Movement Table on page 27, particularly in unusually hot or cold conditions.

Corner Trim:



Trim engagement:

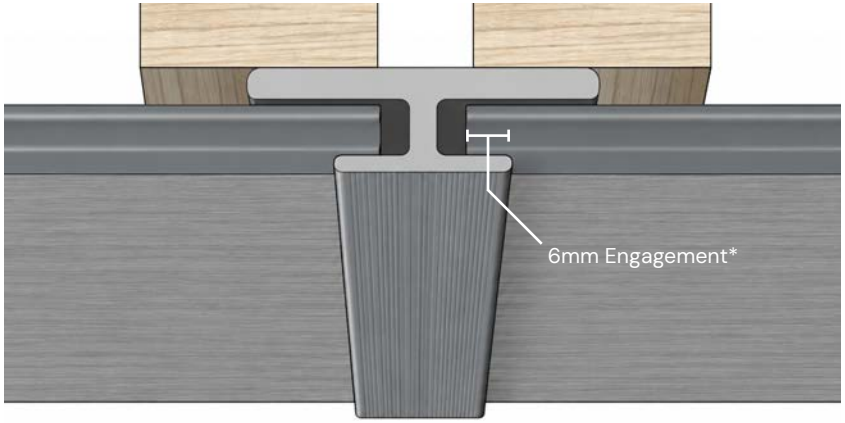

INSTALLATION - HORIZONTAL CLADDING

STEP 2A: PREPARE WINDOW & DOOR OPENINGS

Install trims around openings before fitting the cladding boards.

- Provide sufficient batten support around the opening.
- Measure and cut the Forma Reveal Trim (ECO47160) to suit.
- Rip the return section where required to match the reveal depth.
- Pre-drill and countersink the trim, then fix through the rear flange using suitable wood screws at maximum 750mm centres, fixed at a minimum of 3 points.
- Mitre corners for a clean finish.
- Refer to the Thermal Movement Table on page 27 to work out expansion gaps.

The Reveal Trim detail shown is suitable where the outer face of the window frame sits up to 135mm behind the front face of the substructure.

Once the Reveal Trims are installed, boards can be cut and fitted around the opening as the cladding progresses.

Fitting Reveal Trim:

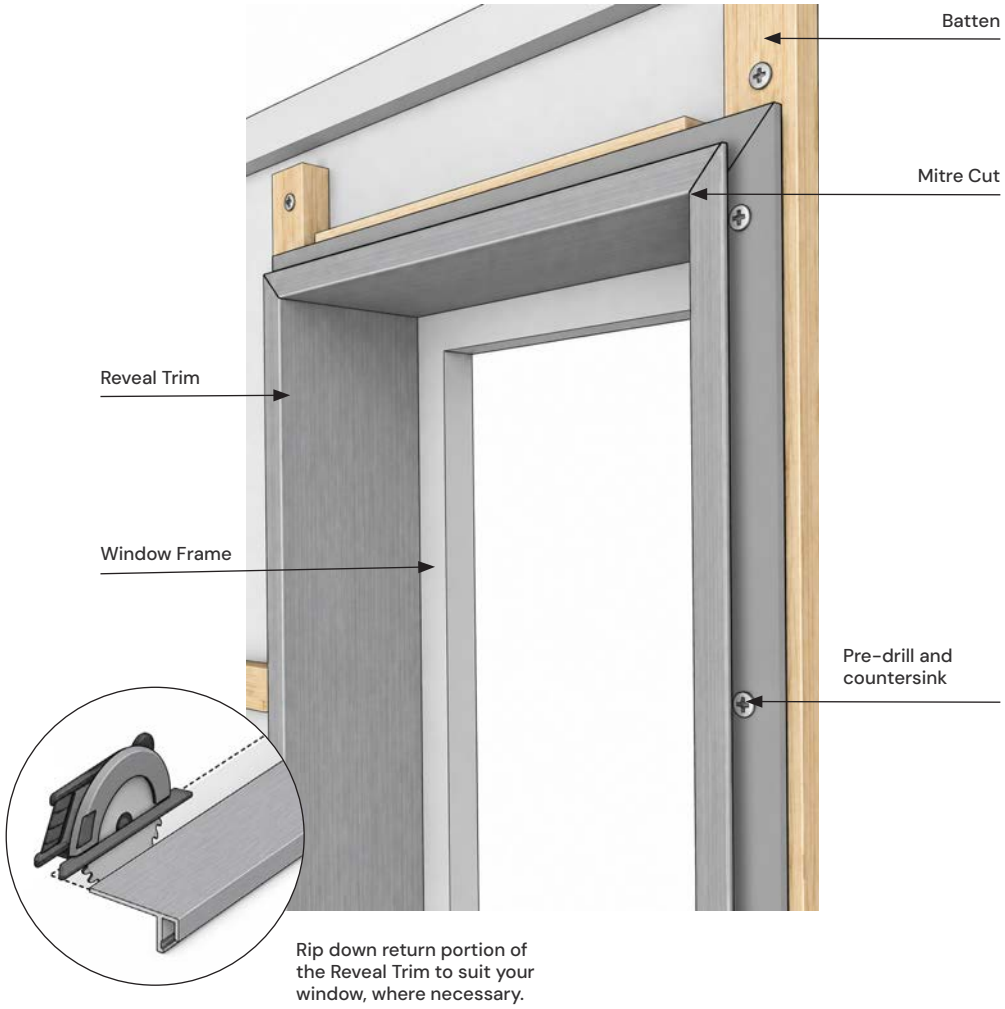

INSTALLATION - HORIZONTAL CLADDING

STEP 3: INSTALL THE STARTER BAR

1. Position the aluminium starter bar (ECO702SB) across the bottom of the vertical battens.
2. Check it is correctly orientated, straight and level.
3. Pre-drill and fix to every vertical batten using suitable screws.
4. Leave a 10mm gap between adjoining Starter Bar lengths.
5. Maintain a minimum 15mm clearance above finished ground or adjacent surfaces.

Check the starter bar remains level before installing the first board.

Starter Bar Orientation

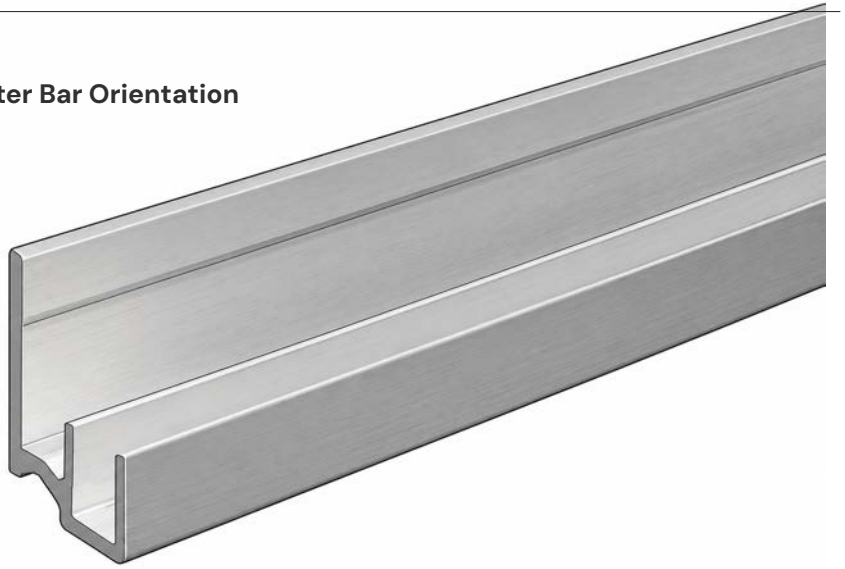

Pre-drill & fix Starter Bar



www.ecoscape.co.uk | 01706 364 637 | sales@ecoscape.co.uk

INSTALLATION - HORIZONTAL CLADDING

STEP 4: INSTALL THE FIRST CLADDING BOARD

1. Position the first board with the front lip of the board facing down towards the starter bar.
2. Slide one end fully into the first vertical trim.
3. Lower the opposite end onto the starter bar.
4. Draw the board back into the second trim.
5. Check the correct engagement at both ends against the Thermal Movement Table.
6. Ensure the board is fully seated and level.
7. Fit an aluminium cladding clip (ECO701CC) at every vertical batten.
8. Fix each clip to the **batten** using an ECO704CW screw.

Do not fix the clips to the cladding boards. This allows the board to expand and contract freely. The only exception is the central locking point detailed in the next step.

Load the first board onto the starter bar

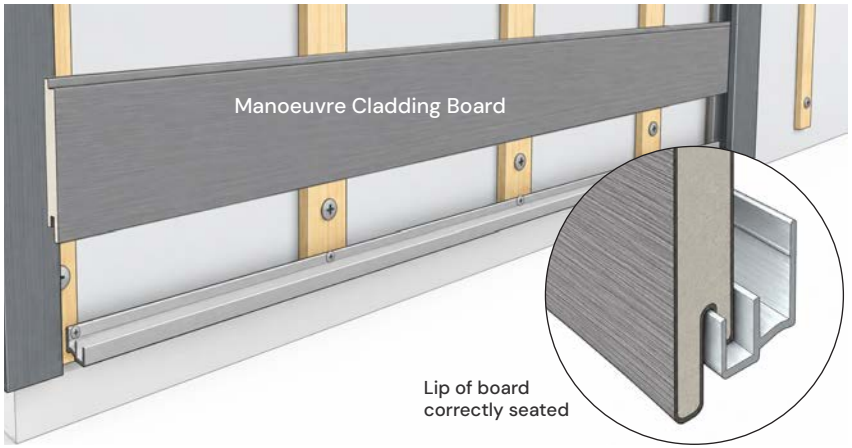

Position the board and fit the cladding clips

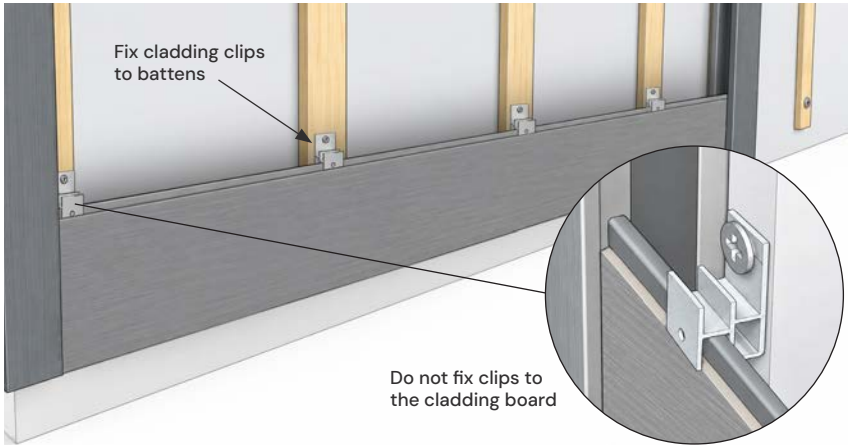

INSTALLATION - HORIZONTAL CLADDING

STEP 5: LOCK THE CLADDING BOARD

Each horizontal board requires one central locking point.

1. Identify the cladding clip nearest the centre of the board.
2. Fit one ECOLCCP Locking Screw through the front of the clip and into the board tongue.
    - This fixes the middle of the board while allowing expansion and contraction towards both ends.
    - Do not lock the board at more than one location per board.

Locking to control thermal movement

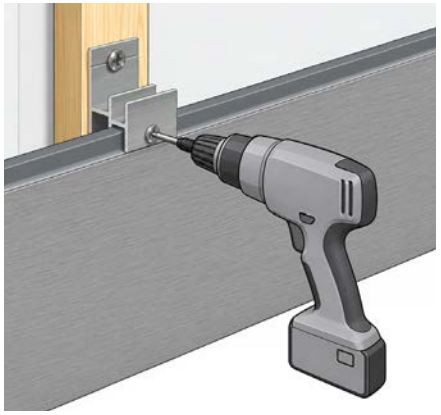

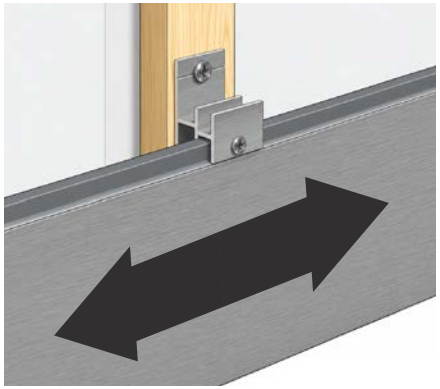

STEP 6: CONTINUE THE CLADDING

Repeat Steps 4 and 5 for each board course until reaching the top of the elevation:

- Engage the board into both trims
- Check the required end engagement
- Ensure the board is fully seated and level
- Fit a clip at every batten
- Fix clips to the battens
- Lock the board at the clip nearest its centre

Continue upwards until you are ready to fit the top board beneath the eaves.

Installing remaining boards



INSTALLATION - HORIZONTAL CLADDING

STEP 7: INSTALL THE TOP CLADDING BOARD

The top board is installed without aluminium cladding clips.

1. Fit an ECO703PP Plastic Pad to every vertical batten, approximately 25mm below the Finishing Board batten.
2. Measure and rip cut the final board to suit.
3. Leave a maximum 10mm gap between the top of the board and the finishing board batten.
4. Engage the board within both vertical trims.
5. Check the board is correctly seated and supported by the plastic pads.

The plastic pads support the top of the board and help prevent movement or rattling.

Fix the plastic pads

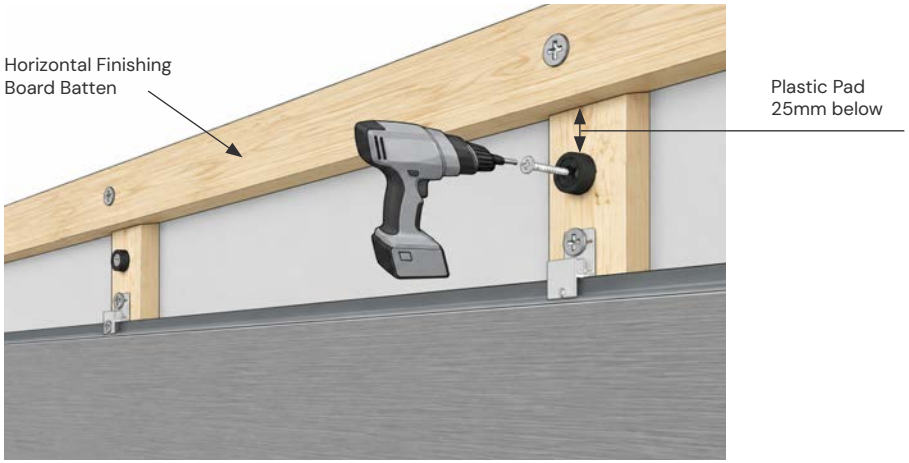

Cut and fit the top board

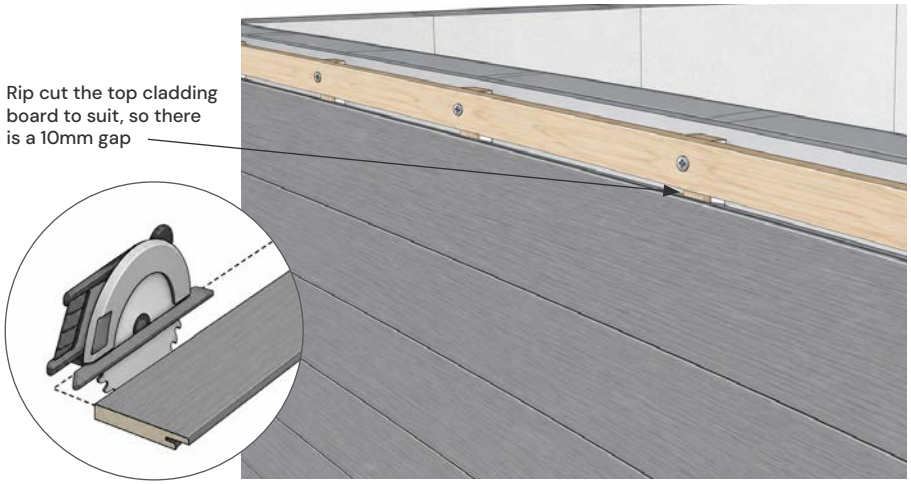

www.ecoscape.co.uk | 01706 364 637 | sales@ecoscape.co.uk

INSTALLATION - HORIZONTAL CLADDING

STEP 8: INSTALL THE FINISHING BOARD

The Finishing Board (ECO8015) conceals the cut edge of the top cladding board and completes the elevation.

1. Position the Finishing Board to overlap the cladding by approximately 10mm.
2. Pre-drill and countersink.
3. Fix through its face into the Finishing Board batten using Ecoscape colour-coded screws at 500mm intervals.
4. Where possible, align Finishing Board joints with the centreline of the vertical trims, maintaining the required expansion gap between adjacent boards.
5. Leave a clearance between the bottom of the Finishing Board and the top of the vertical trim. See the Thermal Movement Table on page 27.

The Finishing Board may be fitted as each bay is completed or once the full elevation has been clad.

As an alternative to a finishing board, F-trims can be used as detailed within the vertical board installation section pages 21-24.

Finishing Board

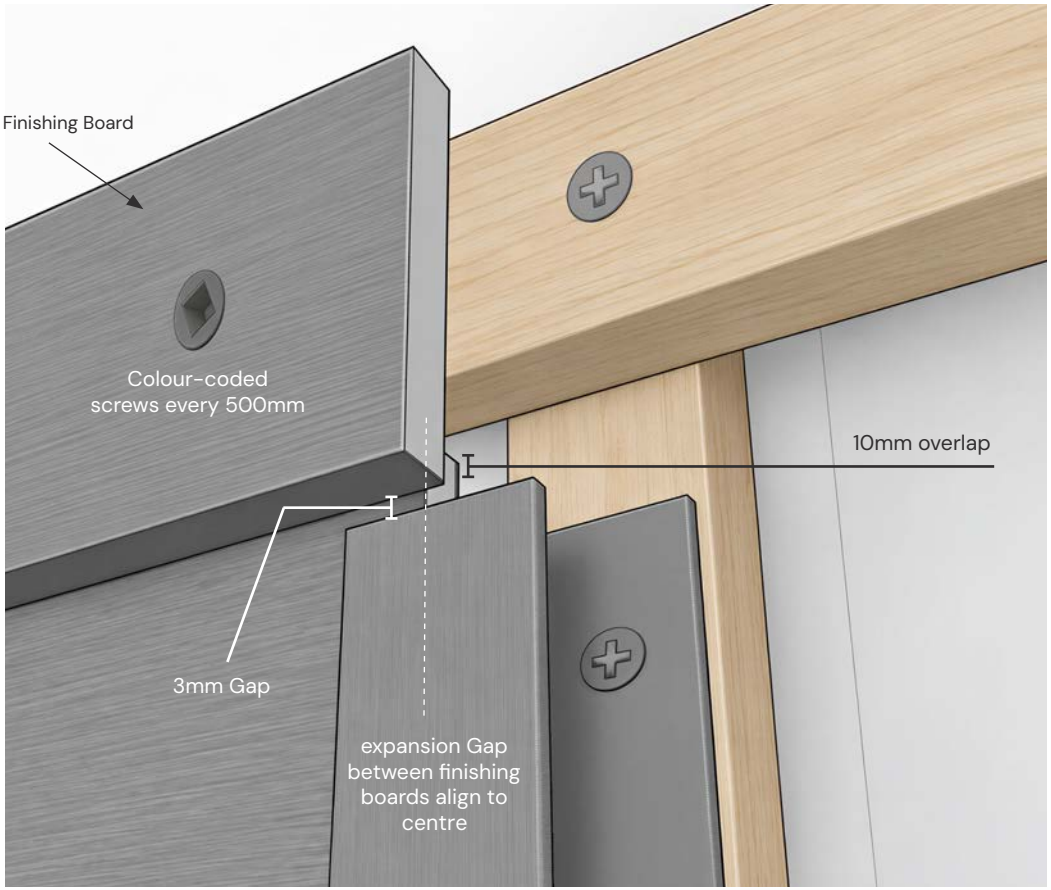

INSTALLATION - HORIZONTAL CLADDING

STEP 9: COMPLETION CHECKS

Before completing the installation, check:

- All boards are level, fully seated and correctly engaged within the trims
- Each board has been correctly locked at its central locking point and remains securely seated while allowing thermal movement.
- All visible trims and finishing components are securely fixed
- Required thermal movement clearances have been maintained
- Minimum 15mm ground clearance remains unobstructed
- Ventilation and drainage paths behind the cladding remain clear
- Trims around windows, doors and other openings are secure
- All cutting debris, swarf and installation marks have been removed

For project-specific guidance, contact the Ecoscape Technical Team.



INSTALLATION - VERTICAL CLADDING

STEP 1: SET OUT THE ELEVATION & BATTENS

- Plan the board layout before fixing battens, allowing for corners, wall ends, windows, doors and eaves.
- Install horizontal board-support battens at maximum 500mm centres.
- Boards 2.5m and longer require a double-batten arrangement at the centre of the board to support two adjacent central locking clips.
- Boards under 2.5m require one central locking clip and do not require a double-batten arrangement solely for the central locking point.
- Provide additional vertical battens at corners, wall ends and around openings to support boards and trims.
- Position the top and bottom battens 20mm from the ground, eaves or adjacent surface, maintaining a minimum 15mm ventilation clearance once finished.
- For elevations over 3.6m high, we recommend using a horizontal Joint Trim to create a premium clean and consistent break between boards. Alternatively, board joints may be staggered, provided the required expansion gap is maintained between adjoining board ends. While staggered joints may reduce material waste slightly, the finished appearance may become less consistent over time, as variations in thermal movement can cause board-end gaps to appear uneven across the elevation.
- Maintain a minimum 20mm clear gap at batten ends where required to preserve ventilation and drainage paths.
- Standard board-support battens: minimum 25mm × 38mm.
- External corners/opening details: minimum 25mm × 50mm, where additional fixing width is required.
- For a Joint Trim, install two 25mm × 38mm battens with a 20mm clear gap



www.ecoscape.co.uk | 01706 364 637 | sales@ecoscape.co.uk

INSTALLATION - VERTICAL CLADDING

STEP 2: INSTALL THE TRIMS

Vertical cladding is installed within bays formed by vertical and horizontal trims, typically creating a picture-frame arrangement.

1. Install the first vertical trim. Pre-drill and fix through the rear flange to the supporting batten at maximum 750mm centres. Mitre the trim where it meets the top and bottom F-Trims. Refer to the Thermal Movement Table on page 27 to work out expansion gaps.
2. Install the top and bottom F-Trims.
    - Fix through the rear flange at maximum 750mm centres, fix in a minimum of 3 locations
    - Mitre corners where they meet the vertical trims. Refer to the Thermal Movement Table on page 27 to work out expansion gaps.
    - Keep trims straight and level.
    - Where multiple lengths are required, maintain the appropriate expansion gap in accordance with the Thermal Movement Table.
    - Maintain a minimum 15mm finished clearance from the ground, eaves or adjacent surfaces.

Drainage: We strongly recommend drilling 5mm diameter weep holes at approximately 200mm centres through the channel of the bottom F-Trim to allow drainage.

3. Install the closing vertical trim. Position it at the opposite corner, wall end or end of the intended cladding run. Mitre and fix as above.

Once installed, the trims form a closed bay.

Boards can normally be flexed sufficiently to engage within the top and bottom F-Trims. Short boards may not provide sufficient flex. Where this occurs, adjust the installation sequence to suit the detail and fit an appropriate closing trim, such as a vertical, Reveal or Joint Trim, after the boards have been positioned.

Mitre F-Trims & Corner Trims to form a picture-frame

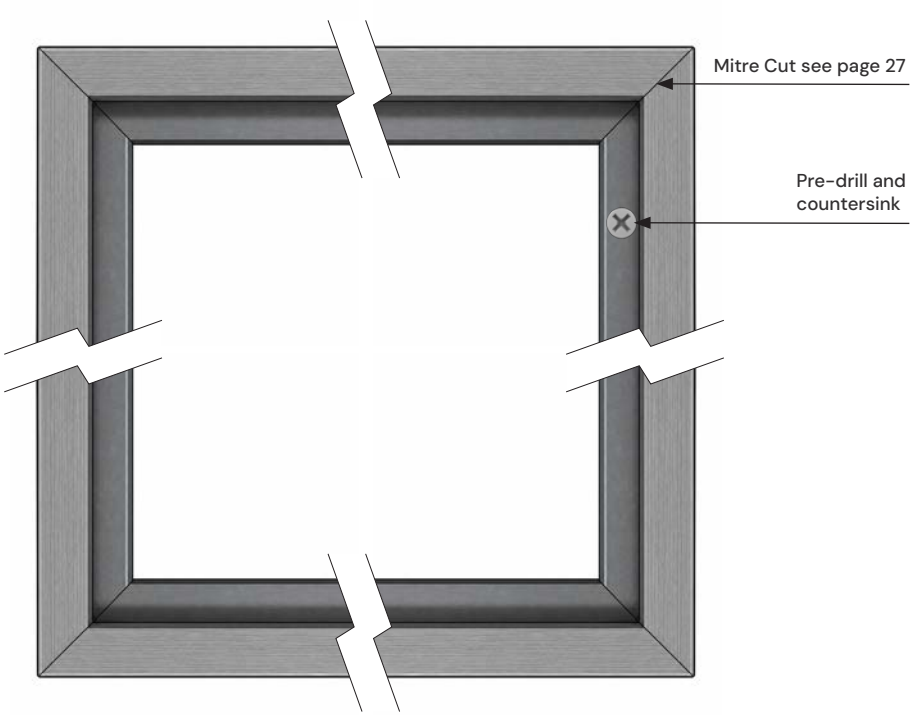

www.ecoscape.co.uk | 01706 364 637 | sales@ecoscape.co.uk

INSTALLATION - VERTICAL CLADDING

STEP 2A: PREPARE WINDOW & DOOR OPENINGS

Install trims around openings before fitting the cladding boards.

- Provide sufficient batten support around the opening.
- Measure and cut the Forma Reveal Trim (ECO47160) to suit.
- Rip the return section where required to match the reveal depth.
- Pre-drill and countersink the trim, then fix through the rear flange using suitable wood screws at maximum 750mm centres, fixed at a minimum of 3 points.
- Mitre corners for a clean finish. Refer to the Thermal Movement Table on page 27 to work out expansion gaps.

The Reveal Trim detail shown is suitable where the outer face of the window frame sits up to 135mm behind the front face of the substructure.

Once the Reveal Trims are installed, boards can be cut and fitted around the opening as the cladding progresses.

Fitting Reveal Trim:

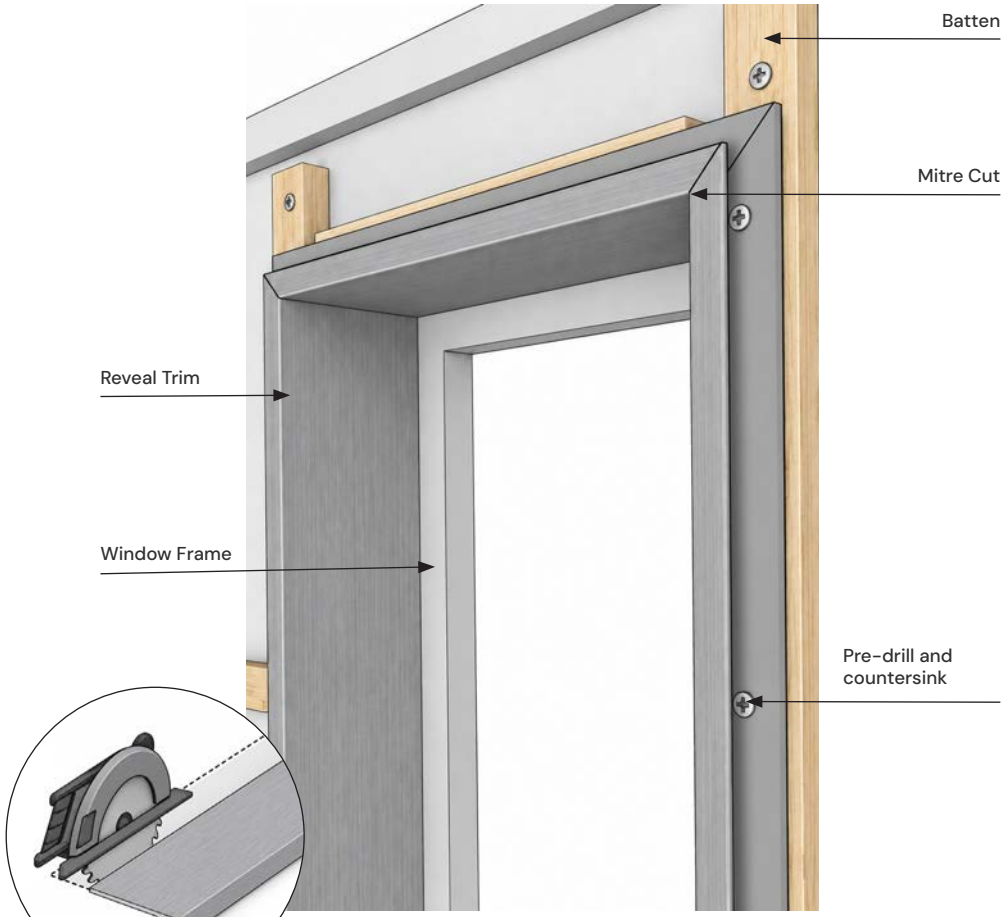

www.ecoscape.co.uk | 01706 364 637 | sales@ecoscape.co.uk

INSTALLATION - VERTICAL CLADDING

STEP 3: INSTALL THE PANEL CLADDING BOARDS

1. Cut the board to length, allowing the required thermal movement at the top and bottom. Under typical UK conditions, this will normally provide approximately 6mm engagement within each F-Trim. See Thermal Movement Table on page 27.
2. Check the Thermal Movement Table when determining the required clearance, particularly in unusually hot or cold conditions.
3. Start at one end of the bay and work progressively across.
4. Position the first board with its front lip facing towards the channel of the vertical trim.
5. Engage the board ends into the top and bottom F-Trims, then slide the board sideways until fully engaged within the vertical trim.
6. Centre the board vertically between the top and bottom trims.
7. Fit an Aluminium Cladding Clip (ECO701CC) at every horizontal supporting batten.
8. Fix each clip to the batten using an ECO704CW Wood Screw.

Do not fix the clips to the cladding boards. This allows the board to expand and contract freely. The only exception is the central locking point detailed below.

STEP 4: LOCK THE CLADDING BOARD

Each board must be locked at a central locking location.

- Boards 2.5m and longer: use the two adjacent central clips supported by the double-batten arrangement.
- Boards under 2.5m: use one clip positioned nearest the centre of the board.

Fit ECOLCCP Locking Screws through the front of the required clip or clips and into the board tongue.

The central locking location controls the direction of thermal movement, allowing the board to expand and contract towards both ends.

Do not create additional locking locations elsewhere on the board.

*Check the Thermal Movement Table on page 27, particularly in unusually hot or cold conditions.

Trim engagement:

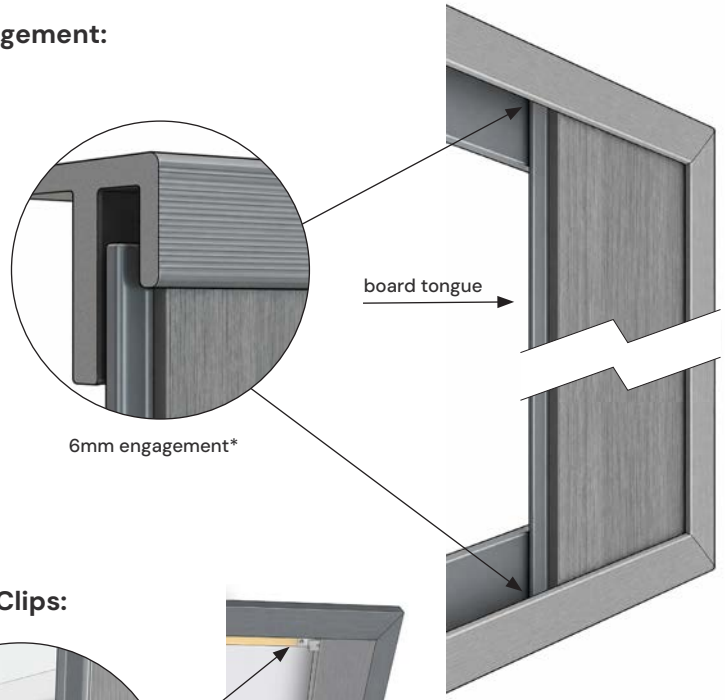

Cladding Clips:

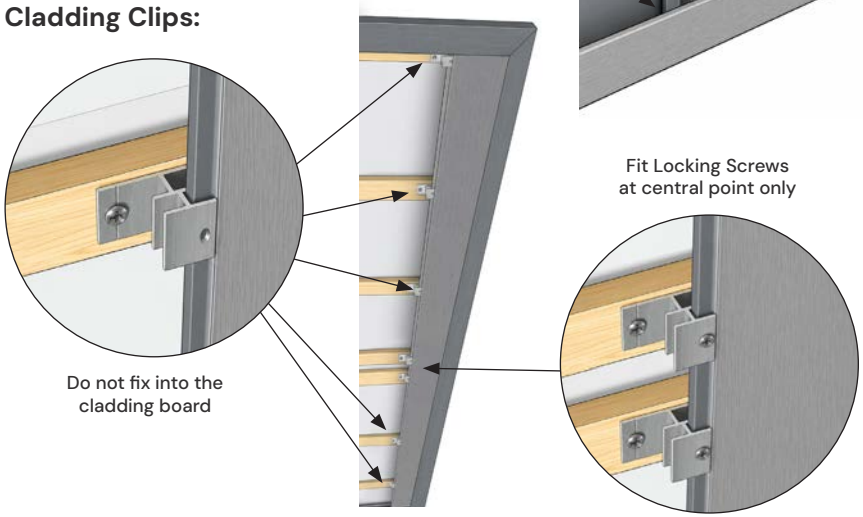

INSTALLATION - VERTICAL CLADDING

STEP 5: CONTINUE THE CLADDING

Repeat Steps 3 and 4 for each board:

- Engage the board into the top and bottom trims
- Fully engage it with the previous board and Aluminium Cladding Clips
- Fit a clip at every supporting batten
- Maintain the required thermal movement allowance
- Lock the board at its central locking location

Continue across the bay until only the final board remains.

STEP 6: INSTALL THE LAST CLADDING BOARD

The final board is installed without Aluminium Cladding Clips along its closing edge.

1. Measure and rip the final board to suit the remaining opening.
2. Carefully manoeuvre the board into position, engaging its ends within the top and bottom trims.
3. Position the cut edge as close as practicable to the closing vertical trim to achieve a clean, consistent finish without an unsightly gap.
4. Where possible, allow the cut edge to engage slightly within the vertical trim. No minimum engagement is specified, as the achievable amount will depend on the installation detail and available board movement.
5. Sit within the F-Trim where possible. Face-fixing may be required, using the appropriate Ecoscape colour-coded screws.

Finishing Board Alternative: Where a Finishing Board is used instead of an Ecoscape trim to close the edge of the bay:

- fit an ECO703PP Plastic Pad at every supporting batten to support the final board and help prevent movement or rattling
- install the Finishing Board over the closing edge
- fix using the appropriate Ecoscape colour-coded screws

Installing the cladding

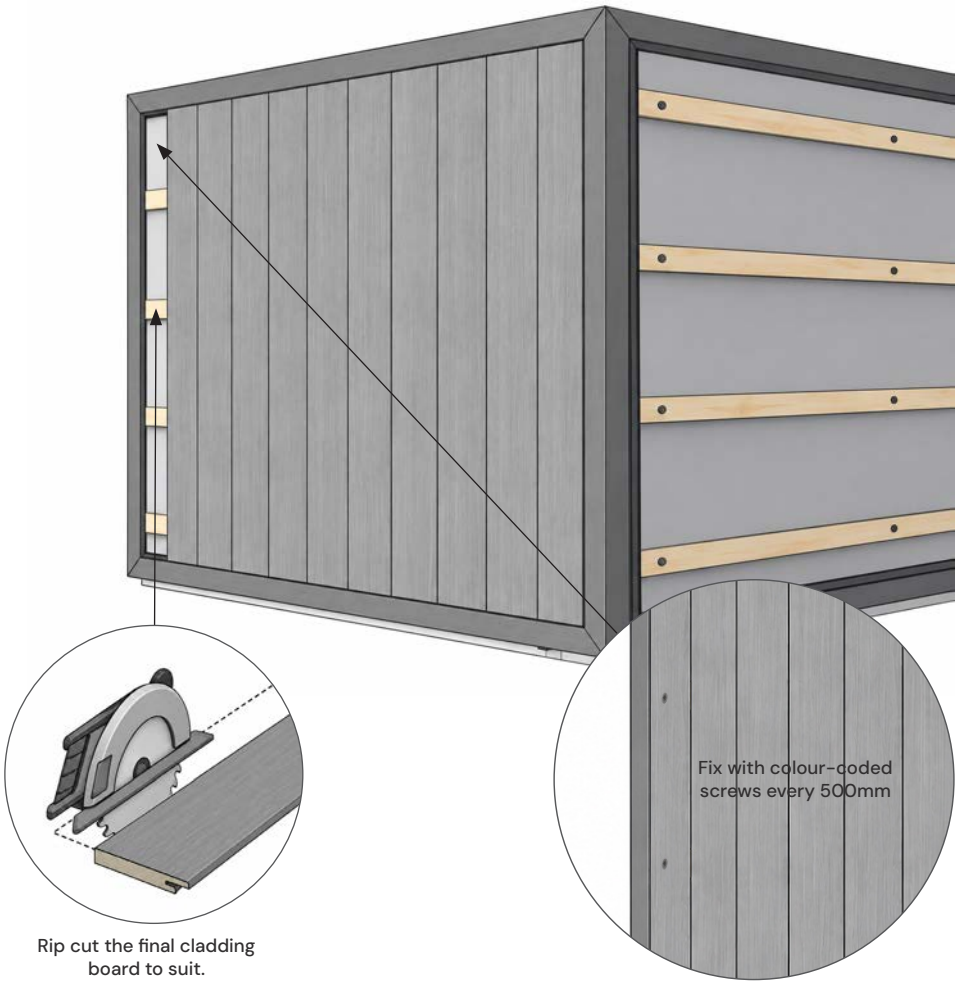

INSTALLATION - VERTICAL CLADDING

STEP 7: COMPLETION CHECKS

Before completing the installation, check:

- All boards are plumb, fully seated and correctly engaged within the trims
- Each board has been correctly locked at its central locking point and remains securely seated while allowing thermal movement.
- All visible trims and finishing components are securely fixed
- Required thermal movement clearances have been maintained
- Minimum 15mm ventilation clearances remain unobstructed
- Ventilation and drainage paths behind the cladding remain clear
- Bottom F-Trim weep holes remain clear, where fitted
- Trims around windows, doors and other openings are secure
- Final ripped boards provide a clean finish without visually objectionable gaps
- All cutting debris, swarf and installation marks have been removed

For project-specific guidance, contact the Ecoscape Technical Team.



www.ecoscape.co.uk | 01706 364 637 | sales@ecoscape.co.uk

CLEANING & CARE

Ecoscape Forma Composite Cladding is designed to provide a durable, low-maintenance façade finish. However, periodic cleaning is recommended to maintain the appearance of the cladding and prevent the build-up of dirt, airborne contaminants, algae, and general environmental debris.

The frequency of cleaning required will depend on the installation environment and exposure conditions. Areas exposed to heavy pollution, coastal conditions, vegetation, or high moisture levels may require more regular maintenance.



General Cleaning

We recommend cleaning the cladding once or twice per year using one of the following methods:

- Pressure Washing
  - Use a pressure washer fitted with a fan-type spray nozzle.
  - Maintain a minimum distance of 200mm from the cladding surface.
  - Always clean in the direction of the board length.
  - Avoid concentrating the spray in one area for prolonged periods.
- Manual Cleaning
  - Use warm water with a mild all-purpose cleaner.
  - Clean using a soft or medium-bristle brush or cloth.
  - Rinse thoroughly with clean water after washing.

Important:

- Do not use metal brushes, wire wool, or abrasive polishing discs.
- Avoid harsh chemical cleaners, strong solvents, or bleach-based products unless approved by Ecoscape UK. Always test on an inconspicuous area first.
- Do not use excessive pressure when pressure washing, as this may damage the board surface.
- Remove construction debris, metal filings, and organic matter promptly to minimise the risk of staining.
- Periodically check the façade following severe weather conditions or nearby building works.

THERMAL MOVEMENT - EXPANSION GAP TABLE

Forma Panel Cladding components expand and contract with temperature fluctuations. The table shows the total movement allowance for an individual board or trim based on its length and the installation temperature.

HOW TO USE THE TABLE

1. Find the component length across the top row.
2. Find the ambient installation temperature in the left column.
3. Read the total movement allowance where the row and column intersect.
4. For centrally restrained cladding boards, divide this value by two, as central locking distributes thermal movement equally toward both ends.

Example:

A 3.6m board/trim installed at an ambient temperature of 5°C has a total linear thermal movement allowance of 6.6mm. When the board is centrally locked, it will expand by 3.3mm at each end.

Important Note:

When calculating expansion gaps between boards and trims, always account for the movement of each adjacent component:

- **Example 1 (Board to Trim):** A 3.6m board, centrally locked, with both ends terminating inside trims = 6.6mm total thermal movement. Allow 3.3mm expansion at each end, resulting in a 3.3mm gap at each board end.
- **Example 2 (Butt-Jointed Boards):** Two 3.6m boards, both centrally locked and butt-jointed end-to-end = 6.6mm total thermal movement per board. Allow 3.3mm at the joint for each board, resulting in a 6.6mm total gap between the boards.
- **Example 3 (Mitred Corner Trims):** Two 3.6m F-trims with a mitred corner joint = 6.6mm total thermal movement per trim. Allow 3.3mm for each trim at the joint, resulting in a 6.6mm total gap between the F-trims.

Board / Trim Length (m)

Installation Temperature (°C)	1	2.4	2.8	3	3.6	3.9	4	4.8	5.4
-10	2.4	5.9	6.7	7.2	8.8	9.4	9.6	11.7	13.0
-5	2.2	5.4	6.2	6.6	8.1	8.6	8.8	10.7	11.9
0	2.0	4.9	5.6	6.0	7.3	7.8	8.0	9.8	10.8
5	1.8	4.4	5.0	5.4	6.6	7.0	7.2	8.8	9.7
10	1.6	3.9	4.5	4.8	5.9	6.2	6.4	7.8	8.6
15	1.4	3.4	3.9	4.2	5.1	5.5	5.6	6.8	7.6
20	1.2	2.9	3.4	3.6	4.4	4.7	4.8	5.9	6.5
25	1.0	2.4	2.8	3.0	3.7	3.9	4.0	4.9	5.4
30	0.8	2.0	2.2	2.4	2.9	3.1	3.2	3.9	4.3
35	0.6	1.5	1.7	1.8	2.2	2.3	2.4	2.9	3.2
40	0.4	1.0	1.1	1.2	1.5	1.6	1.6	2.0	2.2

Total Linear Movement Allowance (mm) For One Board / Trim

This guide is provided for general installation guidance and reflects the information available at the time of publication. Always ensure you are using the latest version, available from www.ecoscape.co.uk. Installation must comply with all applicable building regulations, relevant standards, manufacturer requirements and project-specific design criteria. Where the suitability of the product, substrate, substructure or installation method is uncertain, advice should be obtained from a suitably qualified professional. Ecoscape UK accepts no liability for loss, damage or product failure resulting from incorrect installation, misuse, failure to follow current guidance, or the use of non-approved components. Ecoscape® and Forma® are registered trademarks of Ecoscape UK.

ecoscape®

Higher Broadfield Farm,
Off Pilsworth Road,
Greater Manchester, OL10 2TA

www.ecoscape.co.uk
01706 364 637
sales@ecoscape.co.uk