ecoscape®

www.ecoscape.co.uk
01706 364 637
sales@ecoscape.co.uk

GRANDE COMPOSITE DECKING

November 2026

Specification Guide



Grande Composite Decking

Grande boards are made from 95% recycled material: 55% reclaimed wood fibre and 45% recycled plastic. Advanced co-extrusion gives each board a durable outer layer.

At 225mm, Grande is 50% wider than a standard decking board, for an elegant, contemporary look that is also quicker to fit.

Each board features a dual-sided woodgrain design, with a different colour finish on each face. Choose from two colour combinations: Chateau and Dovetail, or Noir and Mocha.



PRODUCT CODES






Length	Chateau	Dovetail	Noir	Mocha
3.6m	ECOG225CD	ECOG225CD	ECOG225NM	ECOG225NM

DETAILS

LENGTH	3600mm
WIDTH	225mm
THICKNESS	22mm
WEIGHT	4.3kg p/lm
MATERIAL	Co-extruded wood plastic composite
FINISHES	Dual-sided woodgrain: Chateau & Dovetail or Noir & Mocha
JOIST CENTRES	400mm maximum
WARRANTY	25 years

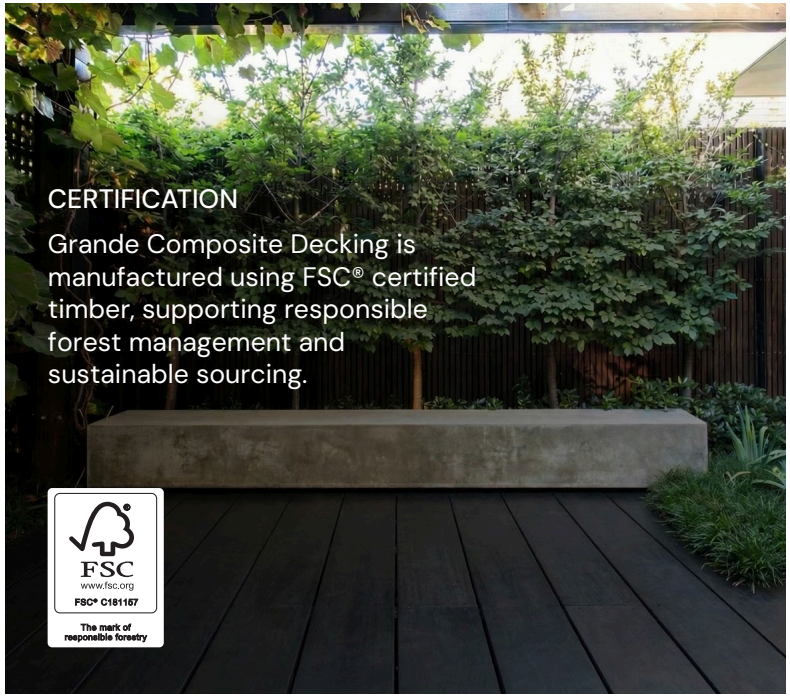

Grande Decking Benefits

Grande has all the benefits of our co-extruded Forma range, with the protection of an HDPE cap. The result is a board that is harder wearing, more resistant to stains and better at resisting colour fading, backed by a 25 year warranty.

- 25 YEAR WARRANTY
- LOW MAINTENANCE
- SLIP RESISTANT
- FAST, EASY INSTALL
- UV STABLE
- HIDDEN FIXINGS





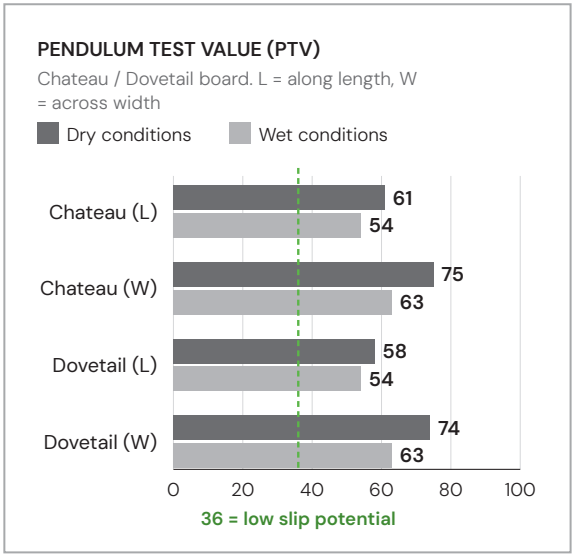

Sustainable Choice

Ecoscape wood plastic composite (WPC) is made from recycled HDPE plastic and reclaimed wood fibre from sustainable timber manufacturing.

Each year, our products incorporate an average of 4,401 tonnes of recycled HDPE plastic, diverting waste from landfill and giving it a new life as durable external building products.

Choosing Ecoscape helps make better use of reclaimed materials while creating durable products for a more sustainable future.

Pendulum Test Value

Grande exceeds the PTV of 36 required for classification as low slip potential on both faces of the board, in wet and dry conditions, along the length (L) and across the width (W).

Working Specification - Decking Systems

The drawings below show a typical substructure detail for Ecoscape composite decking, shown with Ecoscape Plastic Joist Substructure. Grande decking boards must be supported by joists placed at 400mm centres.

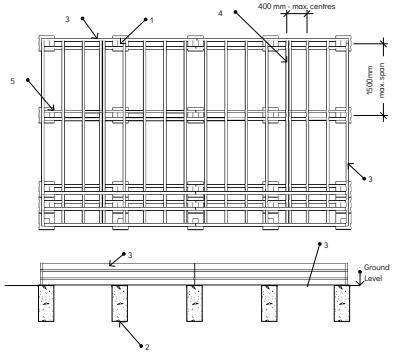

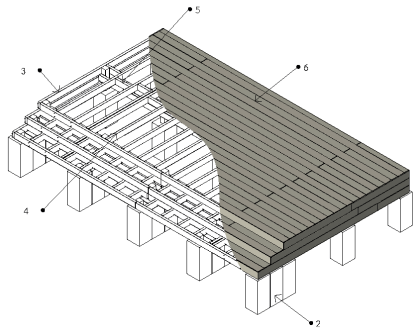

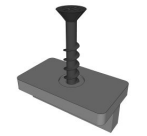

ECO05CT: Hidden T-Clip



ECO05LC: Locking Clip



ECO05SF: Start / Finish Clip

1: 100 x 100mm Ecoscape Plastic Decking Post (ECOPL100100)

2: Concrete Post Foundation

3: Framing Joist - 125 x 50mm Ecoscape Plastic Decking Joist (ECOPL12550)

4: Joist - 125 x 50mm Ecoscape Plastic Decking Joist (ECOPL12550)

5: Noggin - at 1500mm max. centres along joist

6: Grande Decking Boards

Grande decking boards should always be used with Ecoscape's clip system to allow for thermal expansion, with our Locking Clip used to keep boards held in place for years to come.

For further information, please see Ecoscape's Composite Decking Installation Guide on www.ecoscape.co.uk

Property	Test Method	Test Result	Test Requirements	Verdict
Appearance	EN 15534-1:2014 Section 6.1	There is no obvious defects and difference between specimens in appearance		Pass
Slipperiness (Pendulum Test)	EN 15534-1:2014 Section 6.4.2 CEN/TS 15676:2007	Chateau Side: Length: 61 (Dry) / 54 (Wet) Width: 75 (Dry) / 63 (Wet) Dovetail Side: Length: 58 (Dry) / 54 (Wet) Width: 74 (Dry) / 63 (Wet)	Pendulum value≥36	Pass
Linear Mass	EN 15534-1:2014 Section 6.5	Mean.: 4.32 kg/m Min.: 4.27 kg/m	Individual values≥95% declared value by the manufacturer.	Pass
Dimensions	EN 15534-1:2014 Section 6.6	Mean Thickness: 21.64 mm Mean Width: 224.99 mm Mean Length: 1048.7mm Deviation from straightness: 0.8 mm/1000mm Max. Cupping: 0.35 mm		
Falling mass impact resistance	EN 15534-1:2014 Annex A	Type Hollow profile Max. Crack length (mm): No crack	None of 10 test specimens shall show a failure with a crack length ≥ 10 mm or a depth of residual indentation ≥ 0,5 mm.	Pass
Flexural properties	EN 15534-1:2014 Annex A	Maximum Load: Mean: 3487 N Min.: 3375 N Deflection at 500 N: Mean: 1.19 mm Max. 1.23 mm	Flexural properties -F'max: Mean ≥ 3300 N Min. ≥ 3000 N -Deflection under a load of 500 N Mean ≤ 2,0 mm Max.≤ 2,5 mm Span: 432 mm	Pass
Creep behaviour	EN 15534-1:2014 Section 7.4.1	Span: 400 mm Mean ΔS: 2.97 mm Max. ΔS: 3.03 mm Mean ΔSr: 1.81 mm	Known span in use Mean ΔS ≤ 10 mm Max. ΔS ≤ 13 mm Mean ΔSr ≤ 5 mm	Pass
Resistance to artificial weathering	EN 15534-1:2014 Section 8.1 ISO 4892-2: 2013, cycle 1	After 2000h exposure: ΔL* = 5.59, Δa* = -0.82, Δb* = -0.67 ΔE* = 5.70 Grey scale = 2-3	ΔL*, Δa* and Δb* shall be declared	N/A
Swelling and water absorption (28 days immersion)	EN 15534-1:2014 Section 8.3.1	Mean Swelling: 0.78% in thickness ; 0.35% in width; 0.27% length Max. Swelling: 0.97% in thickness; 0.45% in width; 0.29% in length Water Absorption Mean: 3.25% Max.: 3.38%	Mean Swelling: ≤4% in thickness ; ≤0.8% in width; ≤0.4% length Max. Swelling: ≤5% in thickness; ≤1.2% in width; ≤0.4% in length Water Absorption Mean: ≤7% Max.: ≤9%	Pass
Moisture resistance under cyclic test conditions	EN 15534-1:2014 Section 8.3.2	Original MOR: 21.0 MPa After exposure, Mean MOR: 19.8MPa Decrease: 5.7 % Min MOR: 19.3 MPa Decrease: 8.1 %	Decrease of bending strength, Mean ≤ 20 % Max. ≤ 30 %	Pass
Boiling Test	EN 15534-1:2014 Section 8.3.3 EN 15534-1:2014 Section 9.2	Water absorption in weight: Mean: 1.03 % Max.: 1.06 % Mean:	Water Absorption in weight: Mean ≤ 7 % Max. ≤ 9 %	Pass
Linear thermal expansion coefficient	ISO 11359-2:1999	Longitudinal direction: 48 ×10-6 K-1	≤ 50×10-6 K-1	N/A
Heat Reversion	EN 15534-1:2014 Section 9.3 EN 479:2018	Test Temperature: 100°C Mean: 0.06 %		
Heat build-up	EN 15534-1:2014 Section 9.4	Set temperature rise for use in horizontal position: 50 °C Actual temperature rise for black control specimen: 50.0 °C Temperature of test specimen: 46.5 °C Predicted heat build-up ΔT: -3.5°C	At least 2 °C	Pass
Resistance to indentation	EN 15534-1:2014 Section 7.5	Brinell hardness: Chateau: 54.0 MPa Dovetail: 52.6 MPa	Indenter: a hardened steel spherical body with diameter of 10 mm Test load: Additional load of 2000N with preload of 20N Indentation time: (25 ± 5) s Recovery time: at least 24h >50 MPa	Pass
Neutral salt spray test	EN 15534-1:2014 Section 8.6 ISO 9227:2017	After 24h exposure: Chateau ΔE = 0.36, Dovetail ΔE = 0.12		
Moisture content	EN 15534-1:2014 Section 6.3	0.28%	<1%	Pass
Fire Resistance	EN 13501-1:2018	Classification: C_{fl}-S 1		

Disclaimer

At Ecoscape, we take care to ensure the information in this document is accurate at the time of publication and provided in good faith to support your project.

To continuously improve our products, we reserve the right to update specifications, dimensions, colours, finishes, performance data and installation guidelines without prior notice. Visuals, including images, illustrations and drawings, are for guidance only. Nominal dimensions and weights are subject to standard manufacturing tolerances. Natural variations in colour, tone, grain pattern and surface texture are inherent characteristics of Grande Composite Decking and may vary between individual boards and production batches.

To the fullest extent permitted by law, Ecoscape UK Ltd accepts no liability for loss or damage arising from improper specification, storage, installation or maintenance. Always check that you have the latest version of this document before placing an order or commencing work.

ecoscape®

OUTDOOR ARCHITECTURAL MATERIALS

Higher Broadfield Farm,
Off Pilsworth Road,
Greater Manchester, OL10 2TA

www.ecoscape.co.uk
01706 364 637
sales@ecoscape.co.uk