ecoscape®

www.ecoscape.co.uk
01706 364 637
sales@ecoscape.co.uk

# LINEA COMPOSITE DECKING

November 2026

## Specification Guide



## Linea Composite Decking

Linea features a unique dual-sided design. One side offering a traditional groove, creating a distinctive staggered pattern, whilst the other side showcases an authentic straight grain, lending a more contemporary and streamlined appeal.

Available in 5 new on-trend colours, providing something to suit almost any garden design. A range of matching accessories and trims are also available.

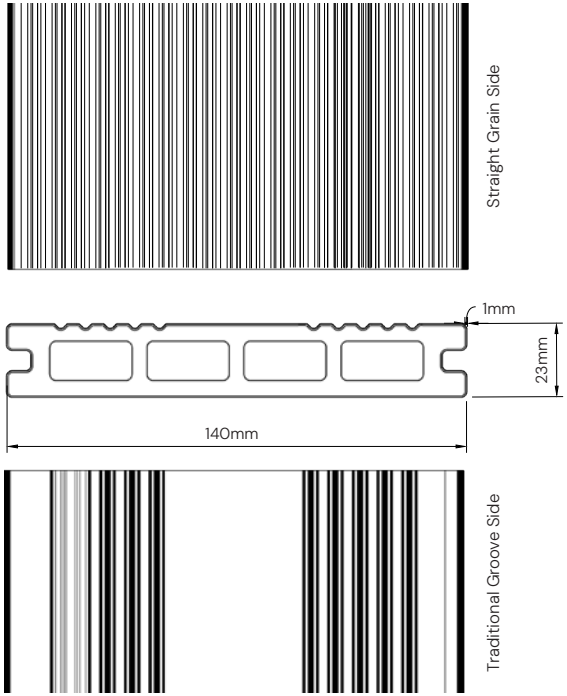


**PRODUCT CODES**







| Length | Birch | Granite | Slate | Onyx | Umber |
|---|---|---|---|---|---|
| 3.6m | ECOLIN36BH | ECOLIN36GT | ECOLIN36SL | ECOLIN36OX | ECOLIN36UM |
| 4.8m | ECOLIN48BH | ECOLIN48GT | ECOLIN48SL | ECOLIN48OX | ECOLIN48UM |

### DETAILS

| | |
|---|---|
| LENGTH | 3600mm / 4800mm |
| WIDTH | 140mm |
| THICKNESS | 23mm |
| WEIGHT | 2.31kg p/lm |
| MATERIAL | Wood plastic composite |
| FINISHES | Traditional groove on one side, straight grain on the other. |
| WARRANTY | 15 years |

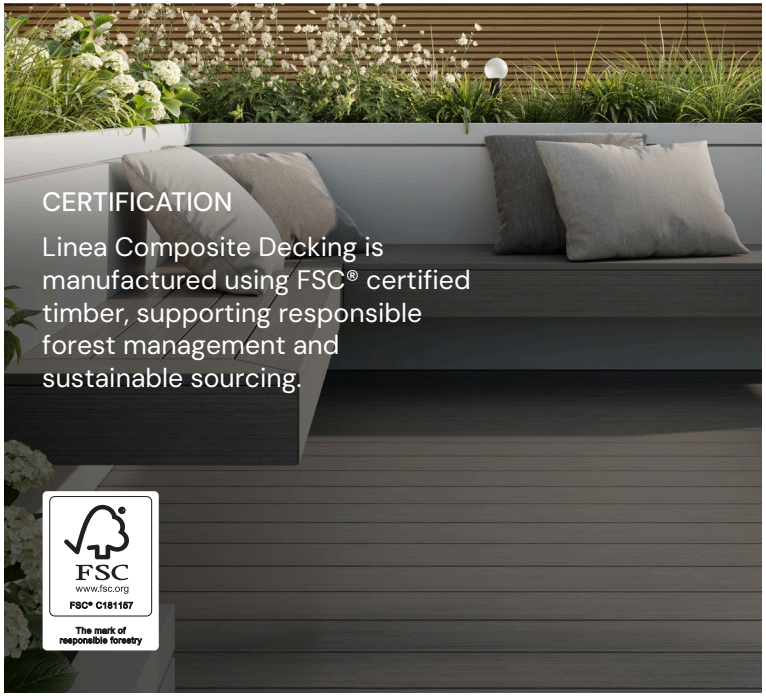

## Linea Composite Decking Benefits

With a low price point but certainly not low in benefits, Linea decking has a capped exterior protecting it from harmful UV rays, scratches and extreme weather. Linea is long lasting, low maintenance and sustainably produced using 95% recycled materials. It's also easy to install with our hidden T-Clip system.

FAST, EASY INSTALL

RECYCLED MATERIALS

HIDDEN FIXINGS

LOW MAINTENANCE

UV STABLE






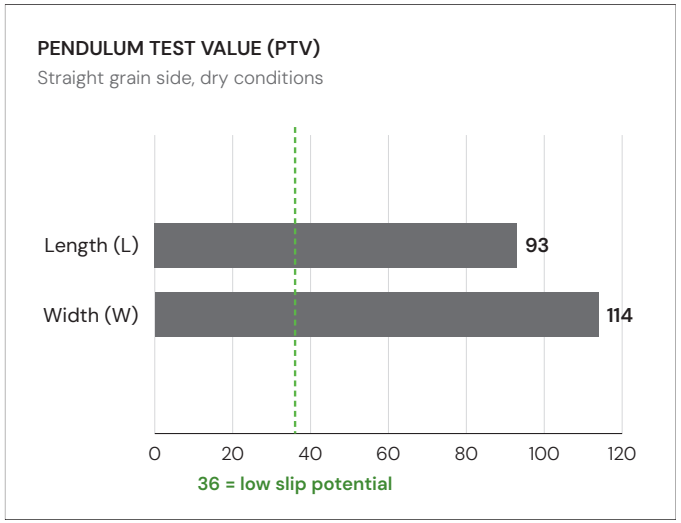


## Sustainable Choice

Ecoscape wood plastic composite (WPC) is made from recycled HDPE plastic and reclaimed wood fibre from sustainable timber manufacturing.

Each year, our products incorporate an average of 4,401 tonnes of recycled HDPE plastic, diverting waste from landfill and giving it a new life as durable external building products.

Choosing Ecoscape helps make better use of reclaimed materials while creating durable products for a more sustainable future.

## Pendulum Test Value

The slip test method results on the left show that the straight grain side on Linea composite decking boards far exceed the required PTV of 36 required to be classified as low slip potential, when tested in dry conditions, across the width of the board (W) and along the length of a board (L).

## Working Specification - Decking Systems

The drawings below show a typical substructure detail for Ecoscape composite decking, shown with Ecoscape's Plastic Joist Substructure. Please note, Linea composite decking boards must be supported by joists placed at 350mm centres.

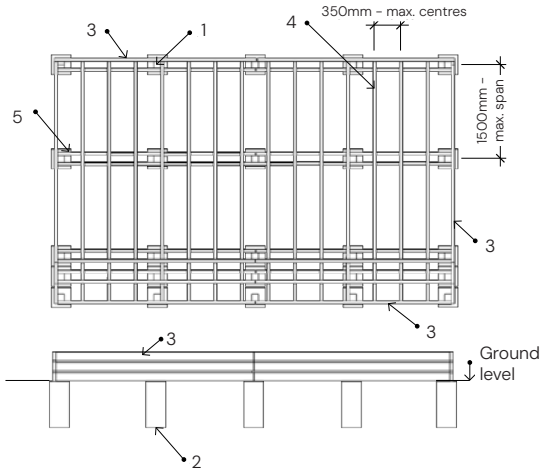


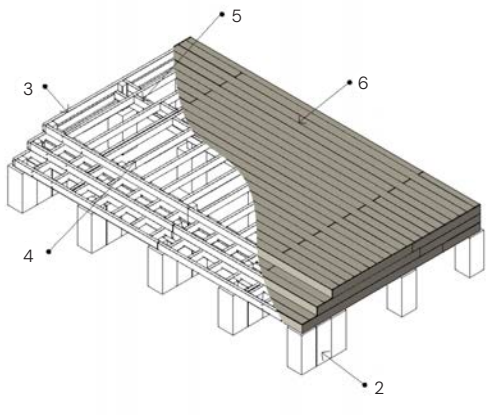




**Hidden T-Clip (ECO05CT)**
-
250pcs/pack, 12.25sqm coverage.
Screw comes pre-inserted.



**Locking Clip (ECO05LC)**
-
1 used per board, controls expansion.
Screw comes pre-inserted.

1: 100 x 100mm Ecoscape Plastic Decking Post (ECOPL100100)

2: Concrete Post Foundation

3: Framing Joist - 50 x 125mm Ecoscape Plastic Decking Joist (ECOPL12550)

4: Joist - 50 x 125mm Ecoscape Plastic Decking Joist (ECOPL12550)

5: Noggin - at 1500mm max. centres along joist

6: Linea Decking Boards

Linea composite decking boards should always be used with Ecoscape's clip system to allow for thermal expansion, with our unique Locking Clip used to keep boards held in place for years to come.

For further information, please see Ecoscape's **Composite Decking Installation Guide** on www.ecoscape.co.uk

| Property | Test Method | Test Result | | Notes |
|---|---|---|---|---|
| Appearance | EN 15534 | There was no visible colour difference or cracks on surface of specimens when compared with the control sample. | | |
| Linear Mass | EN 15534 | Mean value:<br>2309 g/m;<br>Max. value:<br>2317 g/m;<br>Min. value:<br>2303 g/m<br>No declared value submitted by the manufacturer. | | The linear mass and tolerances shall be declared by the manufacturer. |
| Dimensional Characteristic | EN 15534 | Mean value:<br>1050 mm in length<br>139,88 mm in width<br>23,06 mm in thickness<br>Max. value:<br>1050 mm in length<br>140,05 mm in width<br>23,13 mm in thickness<br>0,26 mm in deviation from straightness<br>0,38 mm in cupping | | The relevant dimensional values and their tolerances shall be declared by the manufacturer. |
| Fire Resistance | | | | |
| | EN13501, EN ISO9239-1, EN ISO11925-2 | DfI-S1 | | |
| Falling Mass Impact Resistance | EN 15534 | None of 10 test specimens showed a crack.<br>Maximum depth of residual indentation: 0,20mm | Hollow profiles:<br>None of 10 test specimens shall show a failure with a crack length ≥ 10 mm or a depth of residual indentation ≥ 0,5 mm. In case of one failure, 10 additional test specimens shall be tested and no failure with a crack length ≥ 10 mm or a depth of residual indentation ≥ 0,5 mm shall occur.<br><br>1. Radius of hemispherical striker: 25mm<br>2. Mass of hemispherical striker: 1kg<br>3. Falling height: 700mm<br>4. Support span: 200mm | |

| Property | Test Method | Test Result | | Notes |
|---|---|---|---|---|
| Flexural Properties | EN 15534 | Mean value:<br>Fmax= 3424 N<br>Deflection under 500N= 0,74 mm<br>Bending strength= 20,1 MPa<br>Modulus of elasticity= 2510 MPa<br>Max. value:<br>Deflection under 500N= 0,77 mm<br>Min. value:<br>Fmax= 3258 N | F'max >= 3300 N (arithmetic mean value)<br>F'max >= 3000 N (individual values)<br>Deflection under a load of 500 N <=2.0 mm (arithmetic mean value)<br>Deflection under a load of 500 N <= 2.5 mm (individual values) | |
| Resistance to artificial weathering | EN 15534 | Sample 1:<br>ΔL*=0,10; Δa*=0,11<br>Δb*=-0,03; ΔE*=0,15<br>Grey scale: 4-5<br>Sample 2:<br>ΔL*=-0,24; Δa*=0,06<br>Δb*=-0,01; ΔE*=0,25<br>Grey scale: 4-5<br>It did not show obvious change on the test surface. | ΔL*, Δa*, Δb* shall be declared | |
| Slip Resistance | PVT BS 7976-2:2002 | | | |
| | (TRL / Slider 55) | Length Direction: 93<br>Width Direction: 114 | Pendulum value >= 36 | Pass |
| | Clause 6.4.3 EN-11534-1 | Angle of inclination<br>Length Direction=26° (Class: C)<br>Width Direction=28°(Class: C) | Class C (>24°) | Pass |
| Swelling & Water Absorption (24 hours submersion) | EN 15534 | Mean value:<br>0,04% in length<br>0,02% in width<br>0,26% in thickness<br>1,09% in weight<br>Maximum value:<br>0,07% in length<br>0,05% in width<br>0,44% in thickness<br>1,31% in weight | 1) Means swelling:<br>≤ 4 % in thickness,<br>≤ 0,8 % in width,<br>≤ 0,4 % in length,<br>2) Individual swelling:<br>≤ 5 % in thickness<br>≤ 1,2 % in width<br>≤ 0,6 % in length<br>3) Mean water absorption<br>≤ 7 % in weight<br>4) Individual water absorption ≤ 9 % in weight% | Pass |

| Property | Test Method | Test Result | | Notes |
|---|---|---|---|---|
| Swelling & Water Absorption (28 days submersion) | EN 15534 | Mean value:<br>0,2% in length<br>0,1% in width<br>2,6% in thickness<br>5,0% in weight<br>Maximum value:<br>0,3% in length<br>0,2% in width<br>2,7%in thickness<br>5,5% in weight | 1) Means swelling:<br>≤ 4 % in thickness,<br>≤ 0,8 % in width,<br>≤ 0,4 % in length,<br>2) Individual swelling:<br>≤ 5 % in thickness<br>≤ 1,2 % in width<br>≤ 0,6 % in length<br>3) Mean water absorption<br>≤ 7 % in weight<br>4) Individual water absorption ≤ 9 % in weight | Pass |
| Moisture resistance under cyclic conditions | EN 15534 | Original bending strength= 20,1 MPa<br>After cyclic test:<br>Mean value of bending strength= 19,9 MPa<br>Change of bending strength= -1% (Decrease)<br>Min. value of bending strength: 19,2 MPa<br>Change of bending stength=<br>-4.5% (Decrease) | 1) Mean of decrease of bending strength <= 20 %<br>2) Individual decrease of bending strength <= 30 % | Pass |
| Moisture resistance - Boiling test | EN 15334 | Mean value:<br>0,03 % in length<br>0,03 % in width<br>0,22 % in thickness<br>2,8 % in weight<br>Maximum value:<br>0,05 % in length<br>0,05 % in width<br>0,26 % in thickness<br>3,3 % in weight | 1. Mean value of water absorption ≤ 7 % in weight<br>2. Individual values of water absorption ≤ 9 % in weight | Pass |
| Resistance against discolouring micro-fungi* | EN 15334, IS 16869 | The fungal growth rating:<br>0 | | |

| Property | Test Method | Test Result | | Notes |
|---|---|---|---|---|
| Resistance to salt spray | EN 15534, ISO 9227 | Sample 1:<br>ΔL*=-0,37;<br>Δa*=0,04;<br>Δb*=0,23;<br>ΔE*=0,44<br>Grey scale: 4-5<br>Sample 2 :<br>ΔL*=-0,59;<br>Δa*=0,14;<br>Δb*=0,13;<br>ΔE*=0,62<br>Grey scale: 4-5<br>Sample 3:<br>ΔL*=-0,45;<br>Δa*=0,12;<br>Δb*=0,12;<br>ΔE*=0,48<br>Grey scale: 4-5<br>All sample did not show obvious change on the test surface. | | |
| Heat reversion | EN 15534 | Mean value of heat reversion R= 0,01% | | Heating temperature and period: 100°C, 60min |
| Heat build-up (applicable to products) | EN 15534 | Average temperature rise for the black control specimen: 50°C<br>Average temperature rise for specimen: 48°C<br>Predicted heat build-up: 48°C | | |
| Linear thermal expansion* | EN 15534 | Length direction:<br>Mean value =39*10-6K -1 ;<br>Max. value= 42*10-6K -1 ; | Requirement:<br><= 50□10-6 K-1 | Pass |
| Installation Span | Manufacturer's Specification | | 350mm on centre | |

Disclaimer

At Ecoscape, we take care to ensure the information in this document is accurate at the time of publication and provided in good faith to support your project.

To continuously improve our products, we reserve the right to update specifications, dimensions, colours, finishes, performance data and installation guidelines without prior notice. Visuals, including images, illustrations and drawings, are for guidance only. Nominal dimensions and weights are subject to standard manufacturing tolerances. Natural variations in colour, tone, grain pattern and surface texture are inherent characteristics of Linea Composite Decking and may vary between individual boards and production batches.

To the fullest extent permitted by law, Ecoscape UK Ltd accepts no liability for loss or damage arising from improper specification, storage, installation or maintenance. Always check that you have the latest version of this document before placing an order or commencing work.

ecoscape®

OUTDOOR ARCHITECTURAL MATERIALS

Higher Broadfield Farm,
Off Pilsworth Road,
Greater Manchester, OL10 2TA

www.ecoscape.co.uk
01706 364 637
sales@ecoscape.co.uk