www.ecoscape.co.uk
01706 364 637
timbex@ecoscape.co.uk

TIMBEX - Authentic Woodgrain Composite Decking

August 2026 V2

Installation Guide



CONTENTS

Introduction Page 2
Colours Page 3
Storage & Handling / Tools Page 4
Safety & Installation Guidance Page 5
Calculating Material Page 6
Timbex System Components Page 7
Forte Substructure & Accessories Page 7

Pre Installation:
Installer Notes Page 8
Falls & Gradients Page 8
Planning The Decking Layout Page 9
Alternative Laying Patterns Page 9
Board Spacing & Clearance Page 10
Double Joist Arrangements Page 10
Cutting Boards Page 11
Sealing Boards & Touch Up Paint Page 11

Installation - Substructure:
Timber Joist & Posts Page 12
Weatherproofing of Timber Joists Page 13
Weatherproofing of Timber Posts Page 14
Pedestal Systems Page 14

Installation - Deck Boards:
Face-fixing Page 15
Side-fixing Page 16

Installation - Fascia:
Decking with an Overhang Page 17
Decking without an Overhang Page 17
Installation Checklist Page 18
Removing & Replacing Deck Boards Page 18
Cleaning & Maintenance Page 19

INTRODUCTION

This document provides installation guidance for Ecoscape's Timbex Composite Decking for professional installers, contractors and competent DIYers. All installations must comply with local building regulations, relevant standards and project requirements.

Timbex is a premium decking system with a realistic timber appearance, featuring a cross-laminated eucalyptus hardwood veneer core bonded with exterior-grade, water-resistant resins and a 1.5mm proprietary PU elastomer capping. Boards are fixed to joists using specially designed lost-head screws, through the face or side. The elastomer surface closes around recessed screws for a clean finish.

Timbex offers long-term durability, low maintenance and a premium woodgrain appearance for residential and commercial applications.



COLOURS & FINISH


BLACK OAK


SILVERED OAK

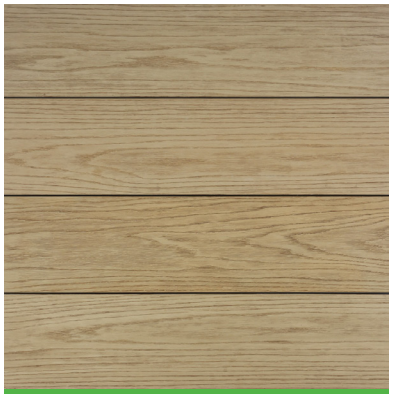
HONEY OAK


BRONZED OAK


ANTIQUE OAK

Timbex decking is available in five carefully selected colours, inspired by the natural ageing and character of oak.

Each board is manufactured using moulds taken from over 20 unique oak boards, creating an authentic timber grain to minimise pattern repetition.

The colour pigments used for Timbex are UV-stable to ensure the decking retains its appearance throughout its 25-year warranty period.



STORAGE & HANDLING

Whilst our composite materials are highly durable, we do recommend that you follow the guidelines below for storage, handling and installation to ensure that products are kept in the best possible condition.

STORAGE

- Materials should be stored under cover, in shade, and protected from weather until ready to install.
- Materials should be covered and kept dry until ready to install to ensure a clean surface.
- All composite products should be stored supported above the ground at 500mm intervals on a flat clean surface. Supporting battens used in storage should align through the stack to equally transfer the load.
- Decking boards must be stacked on top of each other.
- Where multiple pallets are delivered, each stack should not exceed 3m in height.
- Ecoscape will not be held responsible for issues that arise from poor storage.

HANDLING

- Decking materials should be placed and not dumped when unloading. Boards should be lifted and set down with care to avoid damage. Do not slide boards over one another.
- Decking boards should be carried in the middle and on their edge for best support when moving.
- During installation, avoid sliding or dragging any equipment across the board surface to avoid damaging or marking the surface.
- The surface of the decking boards should be kept free of construction debris and material to prevent damage to the boards.
- As with all sites, surfaces should be kept clean and tidy for the best installation outcome.

TOOLS

Recommended tools to install Timbex Composite Decking

Standard woodworking tools can be used when working with Ecoscape Timbex Composite Decking. If you are unsure on how to use any tool, please consult the tool manufacturer's user manual.

- **Circular Saw** - we recommend a 60T+ laminate multi-purpose blade to achieve the cleanest cuts.
- **Mitre Saw** - extremely useful
- **Cordless Drill** - with torque control recommended
- **T15 Screwdriver Bits** - Face-Fix and Side-Fix screwdriver bits are supplied with Ecoscape's Timbex Lost-Head Screw Packs.
- **Tape Measure**
- **Set Square**
- **Stringline**
- **Spirit Level**
- **1" Paint Brush**
- **Touch Up Brush**
- **Pencil**
- **PPE** - Protective eye wear and relevant Personal Protection Equipment (PPE)

SAFETY & INSTALLATION GUIDANCE

Before installing any composite system, check local building regulations for applicable requirements or restrictions. The illustrations and instructions in this guide are for general guidance only and do not replace professional advice.

SAFETY

- Personal Protective Equipment (PPE) should be worn at all times during installation. A COSHH assessment summary is available. When cutting and installing boards, we recommend wearing gloves, safety glasses, hearing protection, a dust mask, long sleeves and trousers.
- Dry and windy conditions may cause a natural build-up of static electricity in composite products. This level of static build-up will not cause personal injury.
- All composite decking boards MUST be installed on a suitable substructure to allow adequate airflow and drainage beneath the boards. Boards must not be laid directly onto a flat surface. A minimum clearance of 50mm beneath the decking should be provided to allow adequate drainage and drying.
- External heat sources, such as sunlight reflected from Low-E glass, can cause excessive heat to build up on the surface of composite decking. Prolonged exposure to excessive heat may cause boards to:
  - sag or warp;
  - expand or contract more than usual;
  - weather more quickly; and
  - in extreme cases, melt at the surface.

  Note: Such extreme heat conditions are considered highly unlikely in the UK due to the generally stable climate.

INSTALLATION GUIDANCE

- Standard woodworking tools can be used to install our composite products. When using a chop saw, we recommend a **60T+ multi-purpose aluminium blade** for clean and efficient cuts.
- We recommend using Ecoscape **Timbex Lost-Head Screws** when installing the boards. The use of alternative screws may invalidate the installation warranty. All fixings should be installed using the Ecoscape **Timbex Spacer**, either face-fixed at 90° or side-fixed at 45° to the decking board.
- Before starting installation, carefully plan your decking layout to achieve the best possible appearance. Pay particular attention to fixed features such as door thresholds, gutter outlets and walls when determining the optimal laying pattern and starting position for the first board.
- Ecoscape composite decking boards are NOT intended to be used as primary load-bearing members, including cantilevered structures, supports, beams or stringers.
- Boards must be supported by a compliant substructure at the recommended* centres. Boards must NOT be installed directly onto existing decking boards.

  ** Maximum 600mm recommended support centres for Ecoscape Timbex Composite Decking.*

CALCULATING MATERIAL

To accurately determine the quantity of Timbex decking required, best practice is to produce detailed plans and elevations and generate a full take-off schedule. Where this is not available, the method below will generally provide a reliable approximation.

Alternatively, contact our technical team at **timbex@ecoscape.co.uk** for project-specific support.

1. **Measure the width and length of your proposed decking area.**
2. **Decide which direction you want to lay the decking boards.**
3. **Calculate the number of board rows required.** If the boards are laid lengthways, divide the deck width by the board width plus the required spacing (eg. 2mm or 5mm, using the Timbex Spacer).

   Timbex deck board width: 0.2m

   For example, for a decking area 4.1m wide x 7.2m long, using a 5mm spacing:
   4.1m ÷ (0.2m board width + 0.005m spacing) = 20 board rows
4. **Calculate the total linear metres of decking required.** Multiply the deck length by the number of boards required across its width:
   7.2m × 20 = 144 linear metres
5. **Calculate the number of full-length boards required.** Divide the total linear metres by the length of the decking board.

   Timbex deck board length: 3.66m

   144 linear metres ÷ 3.66m = 39.34 boards

   Round up to the next whole board: 40 boards
6. **Finally, allow for 5% wastage.**

   Multiply the number of boards by 1.05: 40 boards × 1.05 = 42 boards

   Therefore, **42 × 3.66m Timbex decking boards** are required for this example.

   The same calculation method can be used to determine the number of boards required for the vertical fascias of the deck.

Decking Example



TIMBEX COMPONENTS

Please ensure you are familiar with all the Timbex accessories and fixings prior to starting.



Deck Board

29 × 200 × 3660mm
Available in 5 colours
20+ board patterns



Lost-Head Screw

SSL M4.5 × 48mm
200pcs
Supplied with Face-Fix & Side-Fix Screwdriver Bits.



Face-Fix Screwdriver Bit

T15 (with 3mm stop)



Side-Fix Screwdriver Bit

T15 (with 40mm shank)

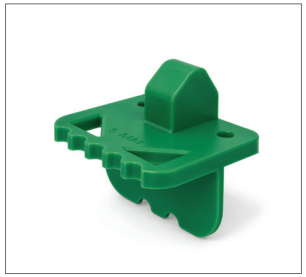

Board Spacer & Fixing Guide

2mm/5mm spacer
20pcs
Includes side fixing and face fixing guide.



Deck Board Touch-Up Paint & Sealant

200ml per can
Available in 5 colours

ECOSCAPE SUBSTRUCTURE & ACCESSORIES



Forte Plastic Decking Joist - 50mm

50 × 50 × 2400mm
Made from 100% recycled materials, won't rot or splinter, 25 year warranty.



Forte Plastic Decking Joist - 100mm

50 × 125 × 3000mm
Made from 100% recycled materials, won't rot or splinter, 25 year warranty.



Forte Plastic Decking Post

100 × 100 × 3000mm
Made from 100% recycled materials, won't rot or splinter, 25 year warranty.

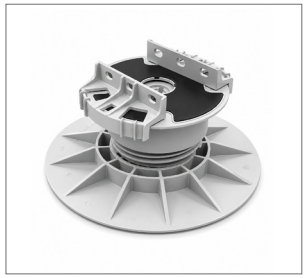

Queen Pedestal

21mm - 1224mm height
Adjustable pedestal for stable, level decking substructure support. Made from 100% recycled plastic.



King Pedestal

30mm - 1089mm height
Heavy-duty adjustable pedestal for stable, level decking substructure support. Made from 100% recycled plastic.



Decking Tape

50/100mm width x 20m length
Preserves your timber substructure. Repositionable, self-seals and made from recycled plastic.

PRE INSTALLATION

INSTALLER NOTES

Decking areas can vary in size and complexity. This guide outlines the key steps for installing the Timbex decking system. The same approach can be adapted for terraces and steps, although these will require additional planning.

The diagrams in this guide show decking installed on an external-grade timber subframe. Boards can also be installed on solid plastic frames. Ecoscape can provide support and advice for alternative installation methods.

FALLS & GRADIENTS

Although not essential, we recommend installing composite decking boards with a 1:100 fall to help water drain from the surface. Where possible, lay the boards parallel to the direction of the fall to encourage water run-off and reduce the risk of slipping when wet.

Check that the completed subframe is flat and even, and follows the required level or designed fall. It should not deviate by more than **3mm** beneath a **2m** straightedge.

Gradient Example



www.ecoscape.co.uk | 01706 364 637 | timbex@ecoscape.co.uk

PRE INSTALLATION

PLANNING THE DECKING LAYOUT

The chosen decking layout will determine the design and level of support required from the substructure.

Standard Installation
For a standard installation, Timbex decking boards should be installed perpendicular to the supporting joists. Alternative laying patterns can also be used, provided the substructure provides adequate support beneath every board and fixing point.

Plan the board layout before constructing the substructure, taking into account changes in board direction, picture-frame borders and board end joints.

ALTERNATIVE LAYING PATTERNS

A variety of laying patterns can be used to add visual interest to the finished deck.

End Joints
Where decking boards meet end-to-end, a double-joist arrangement must be used. See page 10 for more information.

Diagonal
Diagonal layouts can be installed on a conventional substructure; however, the reduced bearing on the joists requires closer joist spacing: 400mm

Picture-frame
Picture-frame borders require additional joists or supporting members around the perimeter to provide adequate support and secure fixing for both the border boards and the ends of the adjoining decking boards.

For more complex layouts or changes in board direction, provide additional joists or noggins to ensure that every board end and fixing position is fully supported

Board Laying Patterns & Substructure Layout

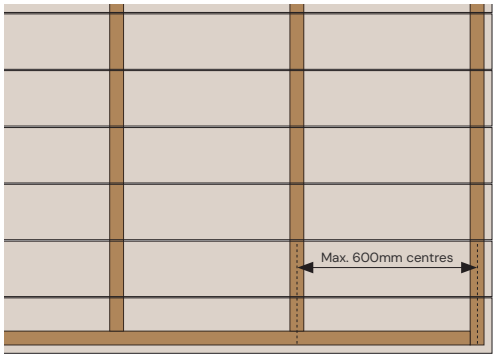

Standard Installation -
Perpendicular boards

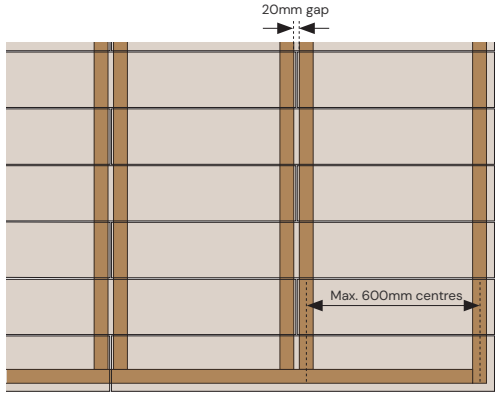

Standard Installation -
Perpendicular boards with end joints
and double joists

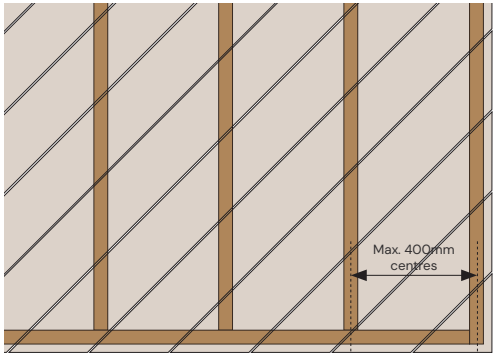

Diagonal boards

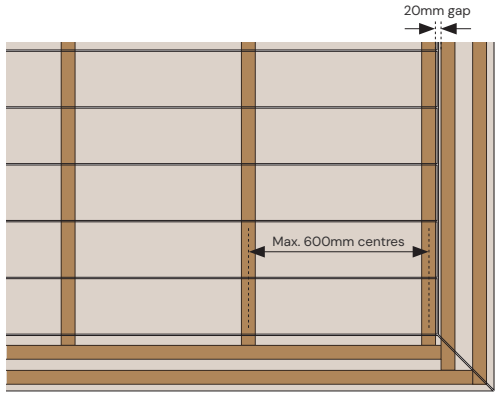

Picture-frame border with additional joists

PRE INSTALLATION

BOARD SPACING AND CLEARANCES

Maintain consistent spacing between Timbex boards throughout the installation.

Timbex can be installed with either a 2mm or 5mm board gap:

- **2mm board gap:** provides a tighter, cleaner and more contemporary appearance. This can only be achieved using the **face-fixing** method.
- **5mm board gap:** provides increased space for drainage and debris clearance. This can be achieved using either **face-fixing** or **side-fixing** techniques.

Use the **Timbex Board Spacer & Fixing Guide** to position each board consistently as installation progresses.

Maintain a minimum **2mm side and end gap** between all Timbex boards, and a minimum **10mm clearance** between the decking and walls, buildings or other solid boundaries.

Timbex is dimensionally stable and does not require a separate temperature based expansion calculation. Maintaining the specified minimum board spacing and perimeter clearances provides the necessary installation tolerance.

DOUBLE JOISTS

Where decking boards meet end-to-end, a double-joist arrangement must be used. Position the two supporting joists approximately **20mm apart** so that each board end has its own fixing support, while allowing water to drain freely between the boards.

For a neat, consistent appearance, we recommend aligning board joints wherever practical and maintaining a symmetrical layout where appropriate, rather than positioning joints randomly across the deck.

Timbex Board Spacer & Fixing Guide

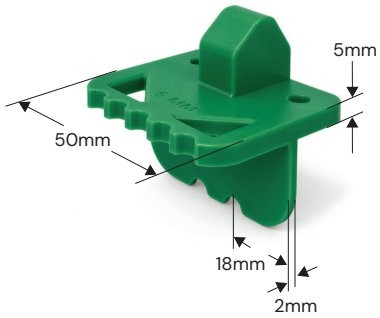

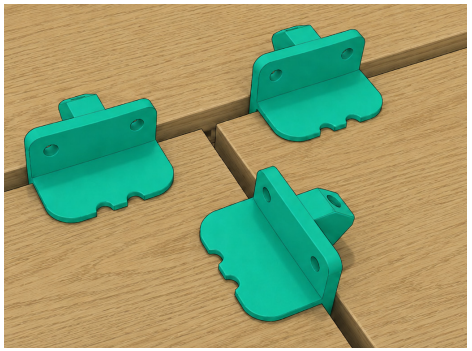

Double Joist Arrangement

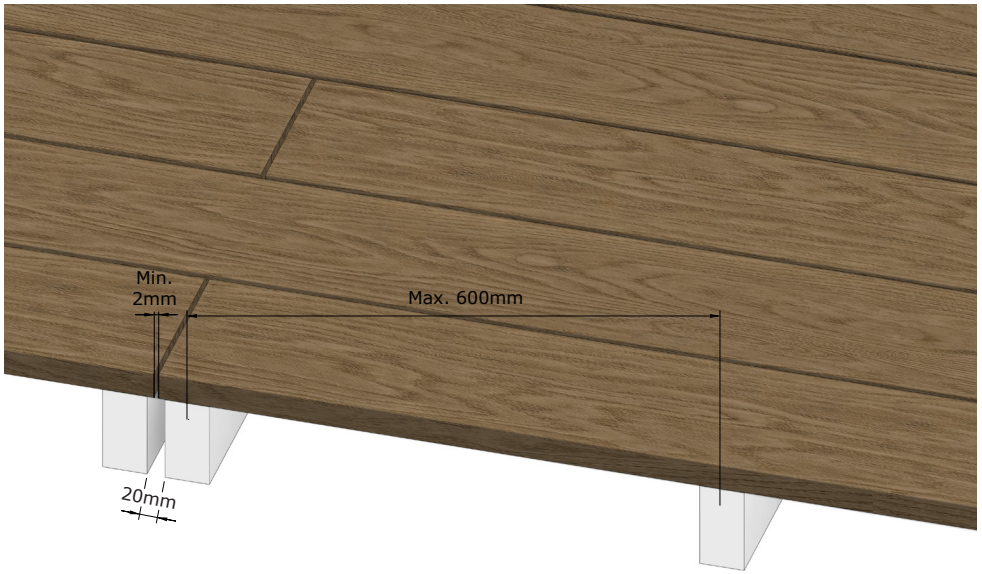

PRE INSTALLATION

CUTTING BOARDS

When cutting Timbex boards, we recommend using a circular saw fitted with a high-tooth-count (60T) multi-purpose blade suitable for cutting wood. Ensure the blade is clean, sharp and in good condition.

Due to normal manufacturing tolerances, the exact length of Timbex decking boards may vary by a few millimetres. When installing full-length boards, it may therefore be necessary to trim the board ends and seal the cut ends to achieve a consistent finished deck edge.

SEALING BOARD ENDS

Where Timbex boards are cut, **one coat** of **Timbex Deck Board Touch-Up Paint & Sealant** should always be applied to the exposed ends to fully seal it. This provides protection for the boards and gives the cut end a consistent, professional finish.

For installations where cut ends are exposed to frequent wetting, standing water or prolonged damp conditions, or in high traffic areas, **additional sealing is required**. (Apply **2–3 coats**, allowing each coat to dry fully before applying the next.)

TOUCH UP PAINT

Although the self-closing elastomer surface of Timbex effectively conceals fixing points, the surface can occasionally become damaged, for example if a screw is installed incorrectly or repeatedly adjusted.

If a small hole or damaged area develops, use a fine touch-up brush and Timbex Deck Board Touch-Up Paint & Sealant to carefully repair the affected area and restore a neat, consistent finish.

Note: Timbex boards can be removed if required. However, where boards need to be lifted and replaced regularly, such as for maintenance access, appropriate access hatches should be installed.

Timbex Deck Board Touch-Up Paint & Sealant





Apply the touch up paint to seal the cut board ends or conceal any minor holes.

Tip: Use a fine touch-up brush for minor repairs.

INSTALLATION - SUBSTRUCTURE

STRUCTURAL INTEGRITY

The contractor is responsible for ensuring the substructure is structurally sound, compliant with building regulations, has correct drainage, ventilation, and is protected against moisture, and is fully capable of supporting the Timbex decking system. Ecoscape shall not be liable for any failure resulting from an inadequate substructure.

TIMBER JOISTS & POSTS

Joists must be securely fixed to suitable posts set in concrete or an equivalent foundation.

JOIST & POST REQUIREMENTS

The following should be regarded as the minimum joist and post requirements for a Timbex substructure.

- Timbex decking can be installed on pressure-treated softwood timber joists (**Grade C16 – EN 14081 or equivalent**) or **Ecoscape Forte Plastic Decking Joists**, depending on the design requirements.
- **Min. joist dimensions:** 50 × 50mm
- **Min. post dimensions:** 100 × 100mm
- **Max. joist spacing:** 600mm centres (for standard installations)
- Joists should be securely fixed in position using suitable **A4 stainless steel countersunk wood/masonry screws**. Each joist must be fixed at a minimum of **three points**.
- To help protect the timber substructure, we recommend covering the top of the joists with **Ecoscape Decking & Cladding Tape**. This helps protect the timber from moisture and can prolong its service life. See overleaf for further information.

Typical Timber Sub-frame

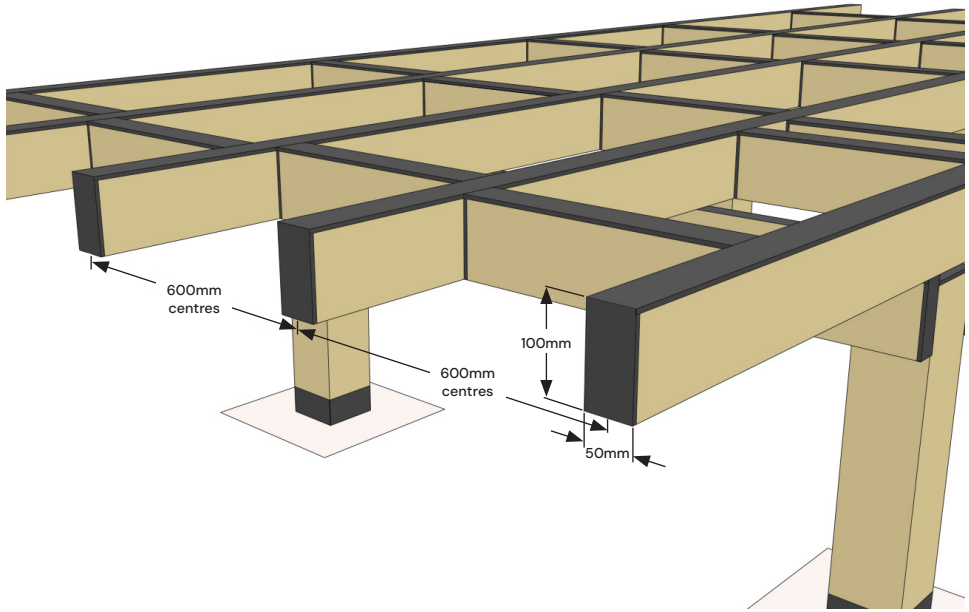

www.ecoscape.co.uk | 01706 364 637 | timbex@ecoscape.co.uk

INSTALLATION – SUBSTRUCTURE

WEATHERPROOFING TIMBER JOISTS

For maximum protection and service life, we recommend using **Ecoscape's Decking & Cladding Tape** when installing timber substructures.

Noggins
Wrap the cut ends of timber noggins with tape to protect them from moisture. Cut ends can be particularly vulnerable to moisture because the protective timber treatment may be removed during cutting.

Joists
Apply the tape along the top of each joist, allowing it to slightly overlap the edges to create a continuous seal. For double or wider joists, overlap the tape as required. The tape adheres to itself to maintain a watertight seal.

Tip: Tape can be applied to the joists before installing the decking boards. It will not deteriorate or lose its protective properties before the boards are fitted.

COVERAGE

Tape coverage: 2.33m per m² (based on 600mm joist centres)

20m roll: 20m ÷ 2.33m = 8.6m² coverage per roll

A typical 22.5m² decking area with joists at 600mm centres will require approximately 3 × 20m rolls of Decking & Cladding Tape.

Applying weatherproofing tape to joists & noggins

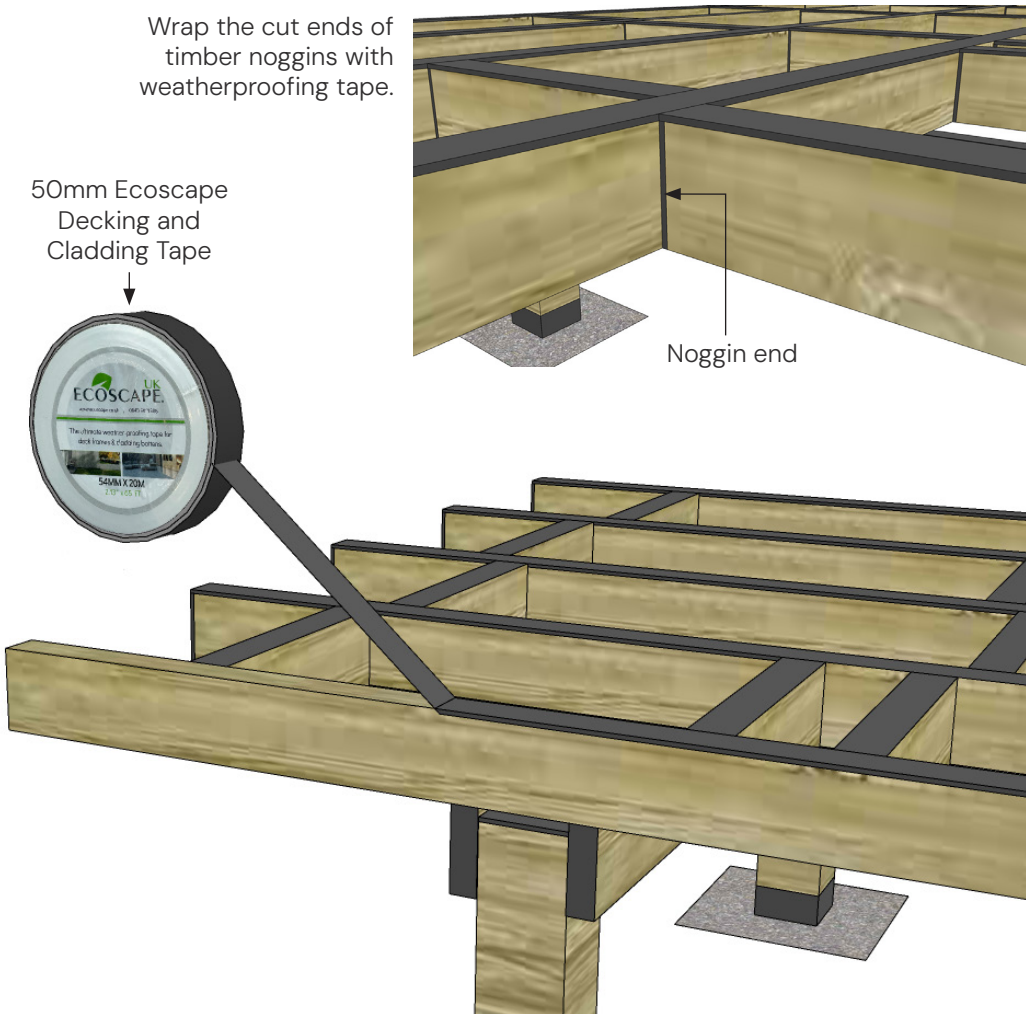

www.ecoscape.co.uk | 01706 364 637 | timbex@ecoscape.co.uk

INSTALLATION – SUBSTRUCTURE

WEATHERPROOFING TIMBER POSTS

Ecoscape's Decking & Cladding Tape can also be used to provide additional protection to timber posts at the point where they enter the concrete foundation.

1. Wrap a single layer of **100mm-wide tape around the post**. Position the tape so that, once installed, the centre of the taped section sits level with the top of the concrete foundation.
2. Set the taped post into the concrete foundation, leaving approximately **50mm of tape visible** above the finished concrete surface.

This provides additional protection against moisture and helps reduce the risk of timber rot caused by water pooling at the top of the concrete foundation.

Alternatively, use Ecoscape **Forte Plastic Decking Posts** (100 × 100mm).

Applying weatherproofing tape to posts

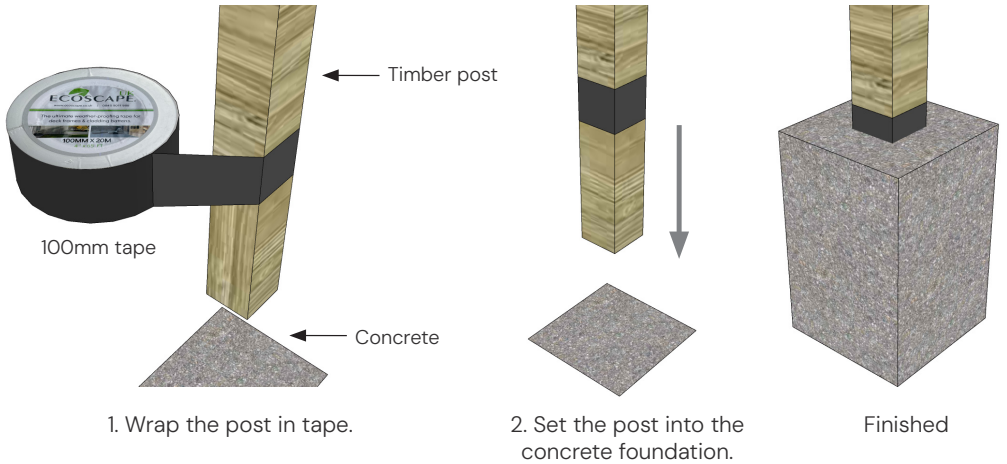

1. Wrap the post in tape. | 2. Set the post into the concrete foundation. | Finished

PLASTIC SUBSTRUCTURE

Ecoscape offer solid plastic joists, to increase the lifespan of decking systems.

DESCRIPTION	SPAN	CENTRES
Forte Plastic Joist 50 x 50 x 2400mm with Timbex Deck Boards	600mm	600mm
Forte Plastic Joist 50 x 125 x 3000mm with Timbex Deck Boards	1500mm	600mm

PLASTIC PEDESTALS

Adjustable plastic pedestals, available from Ecoscape, can be used to support the decking substructure on suitable solid, level surfaces, including flat roofs and hardstanding areas.

Pedestals are placed directly onto the prepared surface, with the height adjusted by rotating the pedestal head to achieve the required level.

We recommend **6–7 pedestals per m²**, depending on the layout and detailing of the installation.

Forte 50 x 50mm Plastic Joists on Queen Adjustable Pedestals

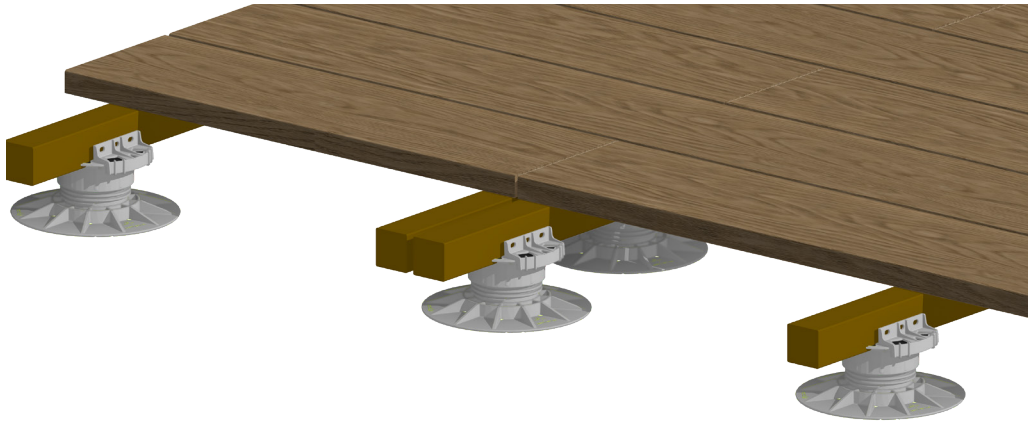

INSTALLATION - DECK BOARDS

Timbex decking boards can be installed using face fixing, side fixing, or a combination of both methods. Use the **Timbex Board Spacer & Fixing Guide** together with the specialist **Timbex Lost-Head Screws** to ensure consistent board spacing and accurate fixing positions. Refer to the relevant installation details for guidance on each fixing method.

FACE-FIXING OPTION

Determine the position and orientation of the first decking board. Position it so that it overhangs the outermost joist by **29mm** (i.e. the thickness of one decking board). This allows a 29mm fascia board to be installed flush with the decking, creating a neat, continuous finish. If a larger overhang is required, the first decking board may overhang the outermost joist further. See p. 17 for further details.

Board overhang:

- **Standard overhang:** 29mm
- **Max. board end overhang:** 100mm
- **Max. board side overhang**: 50mm
- Maintain the specified joist spacing when using an increased overhang.

Fixing requirements:

- Use **two Timbex Lost-Head Screws at every poin**t where a decking board crosses a joist.
- **Drive each screw at 90°** to the board surface.
- Position the fixing line **over the centre** of the 50mm-wide joist underneath.
- Position all screws at least **18mm from the perimeter** of the Timbex board.
- Use the **Timbex Face-Fixing Screwdriver Bit** to set each screw to a **consistent depth of 7mm** below the board surface.

For consistent fixing:

- Use the **Timbex Board Spacer & Fixing Guide** where possible to maintain consistent screw positions from the board edges.
- This provides a neat, uniform finish and helps maintain the minimum 18mm perimeter clearance.
- Consistent screw positioning also makes fixings easier to locate if a board needs to be removed in the future.

Repeat the process until all decking boards are securely fixed in place.

Timbex Board Overhang (Face-Fix Installation)

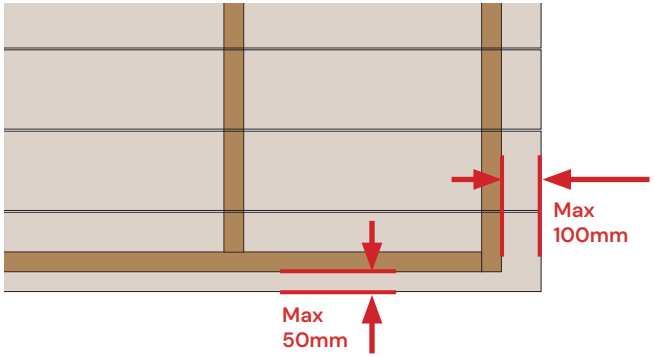

Face-Fixing Locations

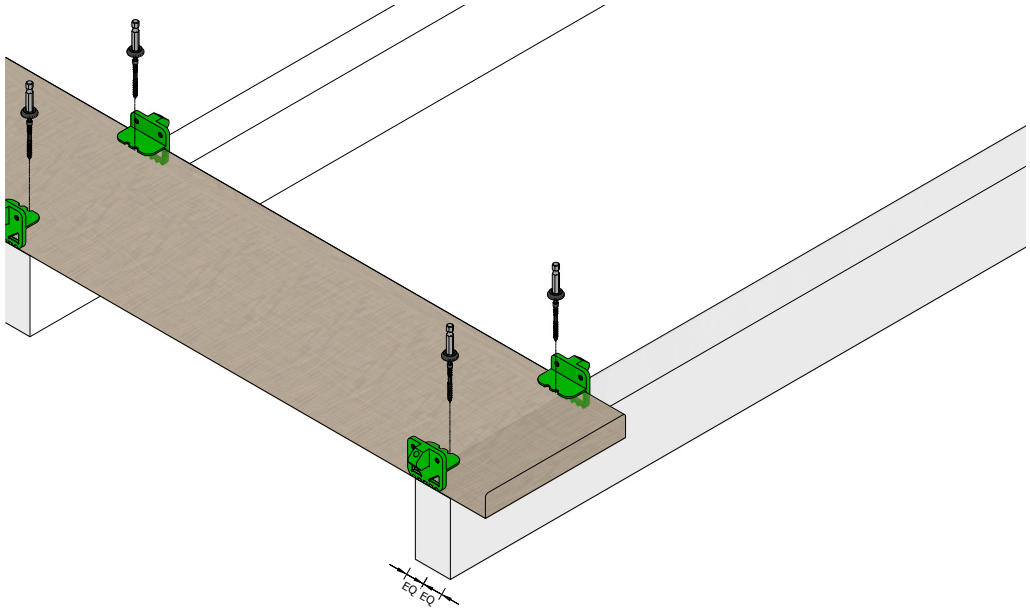

INSTALLATION - DECK BOARDS

SIDE-FIXING OPTION

1. Build the side-fixing jig

To facilitate side-fixing of Timbex boards, you will need to build a simple jig. Take a **60–80mm-long Timbex off-cut** and attach **two Timbex Board Spacer & Fixing Guides** to each side of the board, positioned centrally.

2. Install the first side-fix edge board

Determine the location and orientation of the first decking board.

Board overhang:

- The side of the deck board must **not overhang the joist** when using the side-fixing method.
- The deck board end may overhang the end joist by a **maximum of 50mm**.

Board spacing:

- A **5mm board gap** is required when using the side-fixing method.

Fixing the board:

- Using the **side-fixing jig**, fix the board to the joists with **two Lost-Head Screws at each point** where the board crosses a joist.
- Drive the screws into the centre of each joist, using the **Timbex Board Spacer & Fixing Guides** and **Timbex Side-Fix Screwdriver Bit** to ensure the screws are installed at the correct 45° angle and depth.

Consistent fixing creates a neat, uniform finish and makes the screws easier to locate if a board needs to be removed in the future.

Repeat the process until all decking boards are securely fixed in place.

Side-Fix Jig



Timbex Board Overhang (Side-Fix Installation)

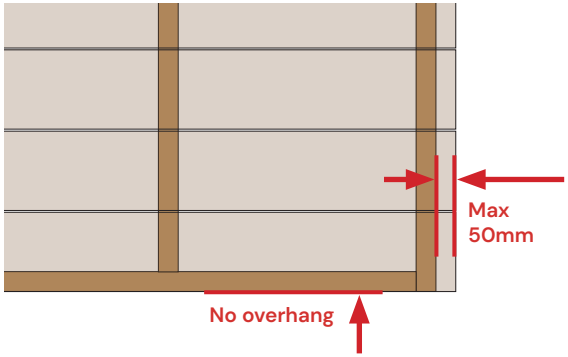

Side-Fixing Locations

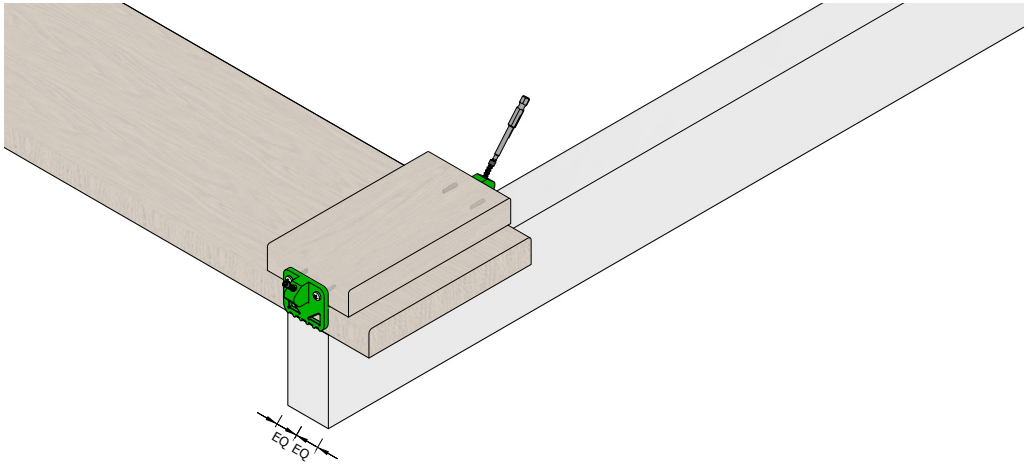

INSTALLATION - FASCIA

Once the main decking boards have been installed, Ecoscape Timbex boards can be used to create a neat fascia around the perimeter of the deck.

WITH A BOARD OVERHANG

Once the main decking boards have been installed, Ecoscape Timbex boards can be used to create a neat fascia around the perimeter of the deck.

Where the top decking board overhangs the fascia, the fascia can be positioned in one of two ways:

- **Option 1 - Fascia flush with board edge:** Position the fascia so that its front face is flush with the edge of the top decking board, creating a clean, continuous finish.
- **Option 2 - Deck board overhangs fascia:** Alternatively, allow the top decking board to extend beyond the front face of the fascia, creating a projecting edge.

Secure the fascia board using two Timbex screws at each fixing point, following the same fixing positions and minimum edge distances specified for the main decking boards.

WITHOUT A BOARD OVERHANG

Where the first decking board does not overhang the fascia, position the fascia so that its top edge is flush with the top surface of the first decking board. This creates a clean, level finish around the perimeter of the deck.

Note: The fascia must not project above the finished surface of the decking, as this could create a trip hazard.

Fascia Installation Options

WITH a board overhang:

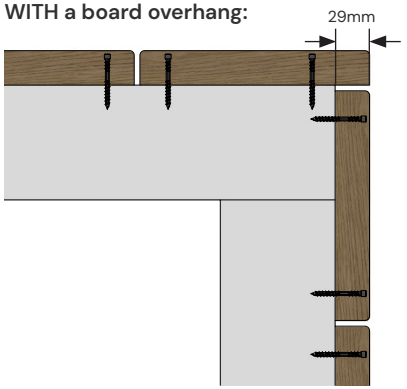

OPTION 1: 29mm overhang, fascia flush with board edge.

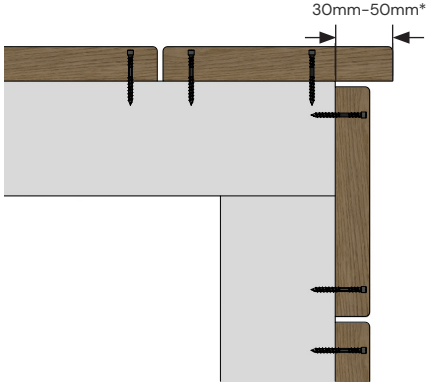

OPTION 2 - BOARD SIDE: 30mm-50mm* overhang, deck board side overhangs fascia.

* See p. 15-16 for more details

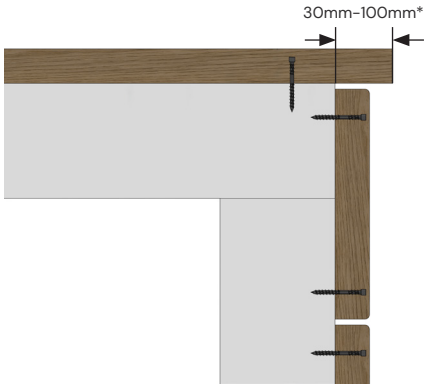

OPTION 2 - BOARD END: 30mm-100mm* overhang, deck board end overhangs fascia.

* See p. 15-16 for more details

WITHOUT a board overhang:

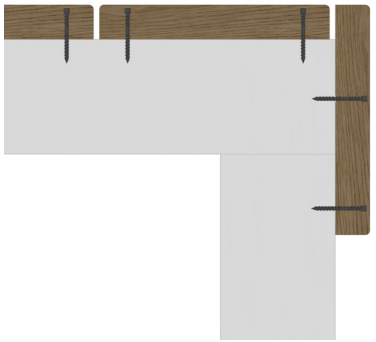

Fascia flush with top of deck.

REMOVING & REPLACING DECK BOARDS

Timbex decking boards can be removed and replaced if required. However, the self-closing elastomer surface conceals the screw heads after installation, making fixing points difficult to locate. Care must also be taken to avoid damaging the board during removal.

Use the **Timbex Side-Fix Screwdriver Bit** when removing both face-fix and side-fix screws.

Removing a board:

- Use the **Timbex Board Spacer & Fixing Guide** to help identify the original screw positions.
- Carefully locate and remove all screws before attempting to lift the board.
- Avoid forcing or bending the board during removal, as this may cause damage.

Reusing a board:

- If the board is removed without significant damage, it can be reused.
- Repair minor surface damage or visible fixing holes using **Timbex Deck Board Touch-Up Paint & Sealant.**
- Replace the board if it has been significantly damaged during removal.

Reinstalling a board:

- Position new fixings at least 20mm away from the original fixing points.
- Ensure all screws remain correctly aligned with the centre of the joist underneath.
- Repair any unused fixing holes using **Timbex Deck Board Touch-Up Paint & Sealant**.

IMPORTANT: Avoid repeatedly removing and re-driving screws into the same fixing points. This can damage the internal fibres of the board core and may cause localised delamination or distortion beneath the elastomer surface.

CLEANING & MAINTENANCE

SURFACE CONTAMINANTS

Dust and Dirt
Remove surface dust and dirt using a low-pressure water rinse. Pressure washing may be used where required, but the maximum pressure must not exceed 120 bar (1,750 psi).

Biological Growth
For general biological growth, clean the decking with hot soapy water and a soft nylon brush.

For persistent mould or organic staining, use an oxygen-based cleaner suitable for composite decking.

Do not use chlorine-based cleaning products.

WINTER CONDITIONS

Snow Removal
When removing snow, use a plastic shovel only. Do not use metal shovels or tools, as these may damage the decking surface.

De-icing
Where de-icing is required, use calcium chloride-based products only. After use, remove any residue with hot soapy water and a soft brush.

Do not use salt-based or ammonium nitrate-based de-icing products.

STAIN REMEDIATION

Grease and Oil Stains
Treat grease and oil stains as soon as possible:

- Clean the affected area with hot soapy water and a soft brush.
- If staining remains, apply a biodegradable degreaser suitable for composite decking.
- Rinse the area immediately with hot water, then clean with a pH-neutral cleaner.

Food and Beverage Spills
Remove spills promptly using hot soapy water and a soft brush. For persistent marks, use a suitable composite-safe cleaner.



BIOLOGICAL CONTROL

Mould Prevention
To minimise the risk of mould and biological growth:

- Maintain a minimum 50mm ventilation gap beneath the decking.
- Carry out annual treatment with a composite-safe algicide where required.

THERMAL HAZARD PREVENTION

Prohibited Heat Sources
Do not place the following directly on Timbex decking:

- Charcoal grills
- Fire pits
- Ember containers

Disclaimer

This guide is provided for general guidance only and reflects information available at the time of publication. Users must ensure they are referring to the latest version, available at www.ecoscape.co.uk, and that all work complies with current Building Regulations, relevant standards and project-specific requirements. Where necessary, advice should be sought from a suitably qualified professional.

Ecoscape® and Ecoscape UK® are registered trademarks and/or trading names of Ecoscape UK Ltd. All intellectual property rights remain with their respective owners.

To the fullest extent permitted by law, Ecoscape UK Ltd accepts no liability for loss, damage or failure arising from incorrect installation, misuse, deviation from current guidance or the use of non-approved components.

ecoscape®

Higher Broadfield Farm,
Off Pilsworth Road,
Greater Manchester, OL10 2TA

www.ecoscape.co.uk
01706 364 637
timbex@ecoscape.co.uk