www.ecoscape.co.uk
01706 364 637
timbex@ecoscape.co.uk

TIMBEX – AUTHENTIC WOODGRAIN COMPOSITE DECKING

November 2026

Specification Guide



Timbex Composite Decking

Timbex is a solid-core composite decking board with a unique, non-repeating woodgrain texture, moulded from over 20 real oak boards for an authentic timber appearance.

Featuring a patented elastomer polyurethane surface layer, Timbex offers exceptional durability and low maintenance. Boards measure 29mm × 200mm and can span joist centres of up to 600mm.

Available in five oak-inspired colours, Timbex is resistant to rot, warping, splintering, scratching and UV exposure, and is backed by a 25-year warranty.

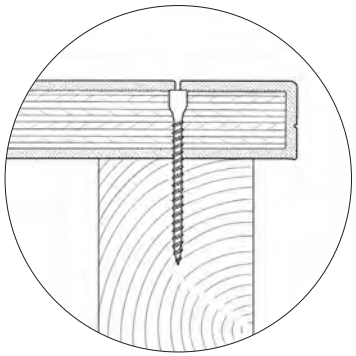

Timbex features an elastomer PU capping and lost-head screws, creating a clean, virtually fixing-free finish.

PRODUCT CODES



Black Oak	Silvered Oak	Honey Oak	Bronzed Oak	Antique Oak
ECODK366BK	ECODK366SV	ECODK366HY	ECODK366BZ	ECODK366AN

PRODUCT DETAILS

Length: 3660mm

Width: 200mm

Thickness: 29mm

Weight: 4.2kg p/lm

Capping: A 1.5mm layer of proprietary polyurethane elastomer enhances the natural woodgrain aesthetic and provides superior protection against weathering, scratching and staining.

Core: Cross-laminated eucalyptus hardwood veneers bonded with exterior-grade, water-resistant resins provide high strength, dimensional stability and reliable fixing retention, delivering exceptional flexural strength.

Finish: Authentic Oak Woodgrain

Fixing Method: Timbex Lost-Head Screws

Joist Centres: 600mm maximum

Warranty: 25 years

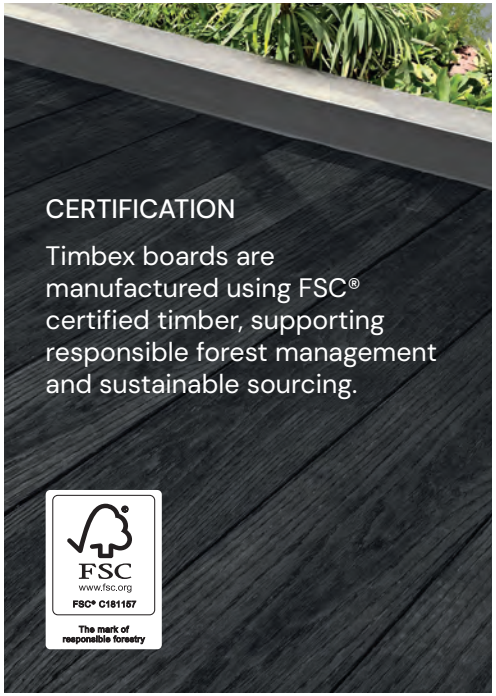

Timbex Benefits

- SELF-CLOSING ELASTOMER SURFACE
- AUTHENTIC WOODGRAIN
- LOW MAINTENANCE
- UV STABLE
- 600MM SUPPORT CENTRES
- SLIP RESISTANT
- 25 YEAR WARRANTY

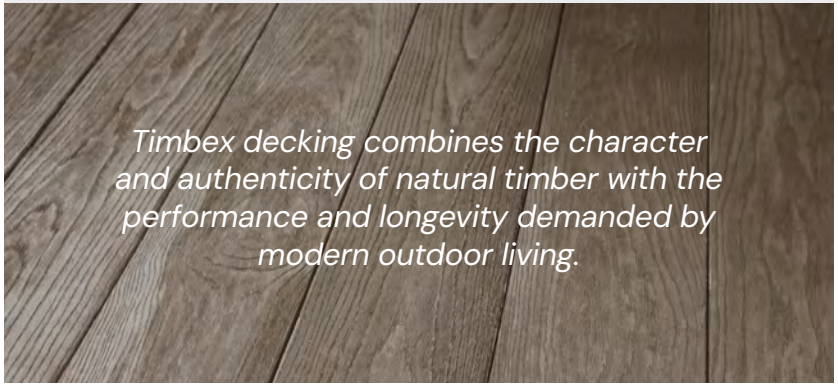

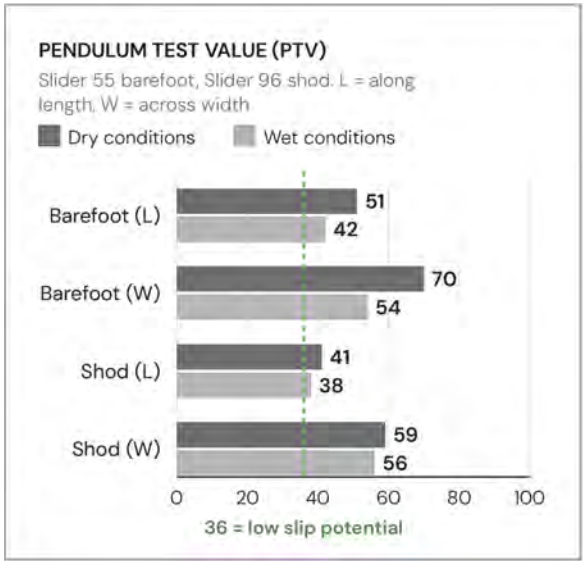

Pendulum Test Value

These slip test results demonstrate that Timbex Composite Decking boards far exceed the required PTV of 36 for classification as having low slip potential. Tests were carried out under dry and wet conditions, both along the length (L) and across the width (W) of the board.



Colour Stability

After 3,000 hours of accelerated weathering under UVA-340 lamps, Timbex measured a colour change of just ΔE*ab 0.9, grey scale 4-5, with no visible change in appearance.

Timbex Components



20+ board patterns

Deck Board



200pcs

Lost-Head Decking Screw



Face-Fix Screwdriver Bit



Side-Fix Screwdriver Bit



20pcs

Board Spacer & Fixing Jig



200ml

Touch-Up Paint & Sealant

Fixing Method

Timbex Composite Decking boards can be installed using face fixing, side fixing, or a combination of both methods.

Use the **Timbex Board Spacer & Fixing Guide** together with the specialist **Timbex Lost-Head Screws** to ensure consistent board spacing and accurate fixing positions.

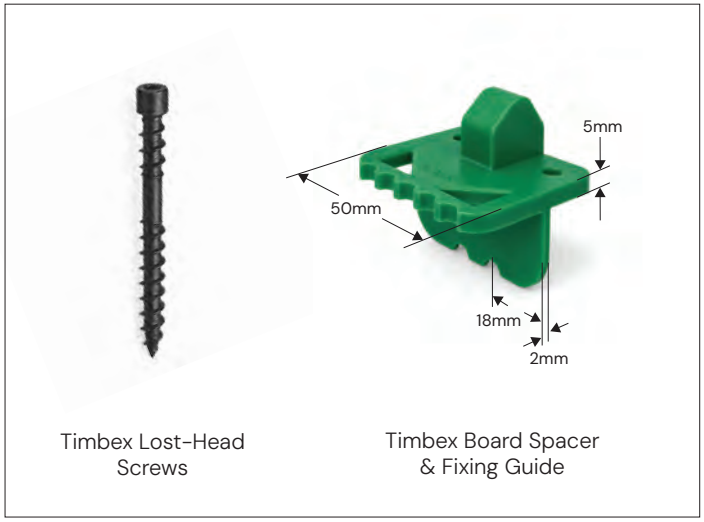

Timbex Lost-Head Screws

Timbex Board Spacer & Fixing Guide

See the **Timbex Installation Guide** for more details.

For further information, please see Ecoscape's Timbex Installation Guide on www.ecoscape.co.uk

Working Specification - Decking Systems

The drawings below show a typical substructure detail for Timbex Composite Decking, shown with Ecoscape's Plastic Joist Substructure. Please note, Timbex Composite Decking boards must be supported by joists placed at maximum 600mm centres.

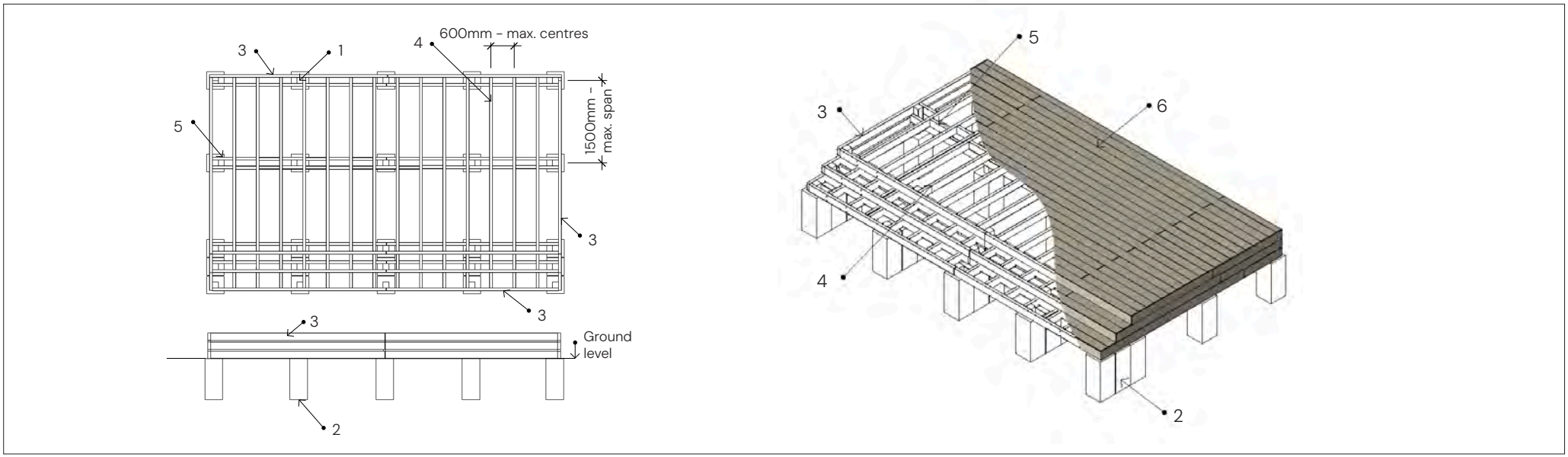

1: 100 x 100mm Ecoscape Forte Plastic Decking Post (ECOPL100100)

2: Concrete Post Foundation

3: Framing Joist - 50 x 125mm Ecoscape Forte Plastic Decking Joist (ECOPL12550)

4: Joist - 50 x 125mm Ecoscape Forte Plastic Decking Joist (ECOPL12550)

5: Noggin - at 1500mm max. centres along joist

6: Timbex Decking Boards

Timbex boards span joist centres of up to 600mm. Flexural tests were carried out over a 550mm span, which equates to 600mm joist centres with 50mm joists.

For further information, please see Ecoscape's **Timbex Installation Guide** on www.ecoscape.co.uk

Specification Table

Property	Test Method	Test Result	Test Requirements	Verdict
Appearance	EN 15534	There was no visible colour difference or cracks on surface of specimens when compared with the control sample.		
Linear Mass	EN 15534	Mean value: 4240 g/m; Declared value submitted by the manufacturer: 4200g/m		The linear mass and tolerances shall be declared by the manufacturer.
Dimensional Characteristics	EN 15534	Mean value: Length:1000 mm Width: 199,25 mm Thickness: 28,60 mm Max value: Length: 1000 mm Width:199,40 mm Thickness:29,01 mm Cupping: -0,18 mm Deviation from straightness: 1,00 mm		The relevant dimensional values and their tolerances shall be declared by the manufacturer.
Falling Mass Impact Resistance	EN 15534	None of 10 test specimens showed a crack.	None of 10 test specimens shall show a failure with a depth of residual indentation ≥ 0,5 mm. In case of one failure, 10 additional test specimens shall be tested and no failure with a depth of residual indentation ≥ 0,5 mm shall occur. 1. Diameter of steel ball: (25+0.5)mm 2. Weight of steel ball: (1000±5.0)g 3. Drop height: 700mm 4. Support distance: (200±1.0)mm	

Property	Test Method	Test Result	Test Requirements	Verdict
Flexural Properties (Span 550mm*) *equates to 600mm joist centres with 50mm joists	EN 15534	Bending strength (MPa)-Arithmetic mean value: 39.3 Maximum individual value: 46.0 Minimum individual value: 34.9 Modulus of elasticity (MPa)-Arithmetic mean value: 4410 Maximum individual value: 4780 Minimum individual value: 4250 Deflection under a load of 500 N<=1.08 mm (arithmetic mean value) Deflection under a load of 500 N<= 1.12 mm (individual values)	F'max>= 3300 N(arithmetic mean value) F'max>= 3000 N(individual values) Deflection under a load of 500 N<=2.0 mm(arithmetic mean value) Deflection under a load of 500 N<= 2.5 mm (individual values)	
Creep Behaviour (550mm)	EN 15534	Mean value of ΔS=0,56 mm Maximum value of ΔS=0,59mm Mean value of ΔSr=0,54 mm	Test condition:23+2°C,50+10% RH Load: 1000N Loading duration: 504h Recovering duration: 24h Requirements of EN 15534-4:2014 : ΔS ≤ 10 mm for arithmetic mean value ΔS ≤ 13 mm for individual values ΔSr ≤ 5 mm for arithmetic mean value	

Property	Test Method	Test Result	Test Requirements	Verdict
Resistance to artificial weathering	ISO 4892-3:2024 Cycle 1&ISO 105-A02:1993/ Cor.2:2005	Exposure duration- 1000h:Grey scale 5, ΔE*ab=0.3 2000h:Grey scale 5, ΔE*ab=0.5 3000h:Grey scale 4-5, ΔE*ab=0.9 Appearance:No visual change	Exposure cycle: ISO 4892-3:2024 Cycle 1 Lamp type: UVA-340 8h UV at (60+3)□ BPT, 0.76W/(m2·nm)@340nm 4h condensation at (50±3)'□ BPT Exposure duration: 3000h	
Slip Resistance	EN 15534: (TRL / Slider 55*) *Barefoot	Dry-L Direction: 51,W Direction:70 Wet-L Direction:42,W Direction: 54	PTV ≥36	Pass
	EN 15534: (4S / Slider 96*) *Shod	Dry-L Direction: 41,W Direction:59 Wet-L Direction:38,W Direction: 56	PTV ≥36	Pass
Swelling & Water Absorption (28 days submersion)		Swelling (%)- Length:0.5 Width:.0.1 Thickness:0.7 Water absorption (%): 3.3	1) Means swelling. ≤ 4 % in thickness, ≤ 0,8 % in width, ≤ 0,4 % in length, 2) individual swelling:≤5 % in thicknesss 1,2 % in width 0.6 % in length 3) Mean water absorption≤ 7 % in weight 4) Individual water absorption≤ 9 % in weight	
Moisture resistance under cyclic conditions			1) Mean of decrease of bending strength <= 20 % 2) Individual decrease of bending strength<= 30 %	
Moisture resistance Boiling test	EN 15534	Water absorption(%)- Arithmetic mean value: 2.9 Maximum individual mean value: 3.1	1. Mean value of water absorption ≤ 7% in weight 2. Individual values of waterabsorption ≤ 9 % in weight	Pass
Linear thermal expansion	EN 15534	4*10^-6 K^-1	≤50*10^-6 K^-1	Pass
Installation Span	Manufacturer's Specification	600mm on centre		

Property	Test Method	Test Result	Test Requirements	Verdict
Pull Through Resistance	EN 15534	Board surface (N): 2915 Pull through parameter (N/mm): 116.6	/	
Nail & Screw Withdrawal	EN 15534	Board surface (N): 2530 The withdrawal parameter (N/mm): 20.1 Board edge (N): 2660 The withdrawal parameter (N/mm): 21.1		
Bonding quality	BS 1088:2018 Clause 5.5 & BS EN314-1:2004 &BS EN 314-2:1993	Class 3		Pass

Disclaimer

At Ecoscape, we take care to ensure the information in this document is accurate at the time of publication and provided in good faith to support your project.

To continuously improve our products, we reserve the right to update specifications, dimensions, colours, finishes, performance data and installation guidelines without prior notice. Visuals, including images, illustrations and drawings, are for guidance only. Nominal dimensions and weights are subject to standard manufacturing tolerances. Natural variations in colour, tone, grain pattern and surface texture are inherent characteristics of Timbex Composite Decking and may vary between individual boards and production batches.

To the fullest extent permitted by law, Ecoscape UK Ltd accepts no liability for loss or damage arising from improper specification, storage, installation or maintenance. Always check that you have the latest version of this document before placing an order or commencing work.

ecoscape®

Higher Broadfield Farm,
Off Pilsworth Road,
Greater Manchester, OL10 2TA

www.ecoscape.co.uk
01706 364 637
timbex@ecoscape.co.uk